4-H 420

Nebraska 4-H Dog Show Rules

Extension is a Division of the Institute of Agriculture and Natural Resources at the University of Nebraska–Lincoln cooperating with the Counties and the U.S. Department of Agriculture.

The 4-H Youth Development program abides with the non-discrimination policies of the University of Nebraska–Lincoln and the United States Department of Agriculture.

4-H Dog Show Rule Book for Nebraska – 4-H 420

Table of Contents –

Introduction
Objectives
Key Points for 4-H Dog Program
4-H Dog Judging Philosophy
4-H Name and Emblem
Ownership
General Regulations
Appeals Process
Show Management
Preparing for the Show
Maintenance of the Show Dog
Dress Code in the Ring
Show Preparation and Equipment
Sportsmanship
Showmanship
Scoring
Showing Tips for the 4-H'er
Showmanship Classes
Ring Procedure
Obedience
General Guidelines
Classes and Scorecards
Scoring in Obedience
Regulations for Performance
Agility
General Rules
Agility Classes
Obstacles
Scoring in Agility
Designing a Course
Rally
Glossary of Terms
Additional Information – Web resources: Sample Patterns, Scoresheets, Photos,
Additional Classes / Disciplines for Youth and Dogs, Dog Care Presentation, First Aid Kit List, etc.
Acknowledgements

INTRODUCTION

This publication is for 4-H'ers, 4-H leaders, judges, Extension staff, show managers and parents. Its purpose is to establish uniform regulations and procedures for the 4-H dog shows and events. The rules will be followed at the State Fair 4-H Dog Show. Use these rules when setting up shows and establishing show rules for 4-H dog shows.

OBJECTIVES

The purpose of the dog project is to help 4-H members:

- Experience the pride of owning and/or being responsible for the training and care of one or more dogs.

- Learn to properly feed and care for a dog and gain knowledge of dog health, first aid and safety precautions.

- Gain experience in training a dog in basic obedience and practice handling, grooming and showing.

- Promote greater love for animals and a humane attitude toward them.

- Develop leadership, initiative, self-reliance, sportsmanship and other desirable character traits.

- Learn citizenship responsibilities through working in groups and support community programs and activities.

- Develop skills to be used later in life when working with groups of people or working with animals.

- Learn positive reinforcement training and animal treatment.

- Youth will learn how science relates to their companion animal project.

- Youth will increase their knowledge in agriculture and career opportunities.

KEY POINTS FOR 4-H DOG PROGRAM – for Judges, Leaders, Parents, Youth and Extension staff

- Dogs are our tools to build great kids.
- Training is a journey.
- Genuine concern where kids are heading in life.
- This is about EDUCATION….. Teaching Kids.
- Youth + Dog = TEAM
- Dog Shows are an opportunity for youth to showcase what they've learned about training and working with their dog – but the show is not the only end result. What the youth have learned about their project area is important such as animal biology and science, care, behavior, careers, etc
- Not just about going to competitions or shows, it's about having a better trained and better behaved pet.

4-H DOG JUDGING PHILOSOPHY – judges working with youth in a manner that:

- Fosters a positive experience
- Uses both praise and constructive criticism
    - (sandwich method= praise / constructive criticism / praise)
- Identifies teachable moments

- Judges the situation, Judges score what they see in the show ring at that particular moment, What you see today, not what you expect or what you have seen in the past.
- Is consistent
- Does not set youth up for failure and avoids using unfair procedures or tricks.
- Keeps it enjoyable for everyone. Gives all exhibitors time to complete exercises, yet keeps show moving along.
- Utilizes Positive Youth Development Principles: such as the 4-H Pledge, Experiential Learning Model, Life Skills Model, and 4-H Essential Elements.
- Knowledgeable of the rules.

4-H NAME AND EMBLEM

By Federal law, only activities or programs under supervision of the Cooperative Extension may use the 4-H name and emblem.

Shows sponsored by other organizations and shows that do not provide separate classes for 4-H'ers are not permitted to use the 4-H name and emblem. In such cases, the title "junior dog show" or a similar name should be used.

OWNERSHIP

4-H is a learning by doing educational program. Because of the educational goal, 4-H members are expected to care for and train their dogs. Youths learn very little if someone else trains and cares for their dogs.

Exhibitor should provide primary care and training for the dog. The dog should reside with the exhibitor or be cared for by the exhibitor the majority of the year. A youth may borrow a dog for their project but must be responsible for the daily care of the animal.

If a dog has previous training experience by another 4-H member or through another organization, the dog must show at the highest level that the dog has achieved.

Youth are encouraged to keep records from their show experiences such as score sheets and written summaries of show dates, classes entered, and ribbon placings to assist tracking their progress through the levels in the different show classes.

GENERAL REGULATIONS

1. VACCINATIONS – All dogs must be immunized and current for distemper, hepatitis, parvovirus, and rabies. Vaccinations must be administered according to vaccine label guidelines (effective for 1 or 3 years). Dog owners are encouraged to visit with their veterinarian to determine if other vaccinations are recommended for their area or for travel (such as bordetella). A photocopy of vaccination record form (SF 263) noting all vaccinations is required as part of the advanced entry. All vaccinations must be in effect at the time of the show. Exhibitors may want to get annual vaccinations in the spring and have the SF 263 filled out one time to use for the whole year

2. DISQUALIFIED DOGS-Females in season will not be permitted to be shown. Overly aggressive dogs may be disqualified at the discretion of the judge or superintendent. A handler who cannot or does not properly control a dog will be excused and disqualified. Lame or crippled dogs will not be permitted to show if it is determined by the judge or show superintendent that it is affecting the health of the dog.

3. ROUGH HANDLING - Any rough handling or abuse of dogs on the grounds or in the ring will result in disqualification.

4. BAITING-Baiting with food, squeakers, or toys will not be permitted in any class and is cause for disqualification. Handlers may use baiting action without food or toys in showmanship. The judge has the authority to disqualify violators.

5. DOG AGE - A dog must be 6 months or older to be exhibited in dog competitions.

6. CLEANUP - This shall be the EXHIBITOR'S RESPONSIBILITY. This includes all areas while on the show site. Dogs should use the designated dog exercise area.

7. EXERCISE AREA – Exhibitors should frequently use the designated exercise area(s) for restroom breaks for their dogs. All clean up and disposal in designated trash cans is the responsibility of the exhibitor.

8. SOILING IN THE RING - If a dog has an accident in the show ring, the exhibitor will be asked to stop, clean up and disinfect the area with supplies provided by the show. Ring stewards will assist by holding the dog's leash. The exhibitor will finish their class and will be lowered one ribbon placing as a penalty for that particular class due to soiling in the show ring.

9. GROOMING AND WARM UP DAY OF SHOW - Only exhibitors are allowed to groom or work dogs at the show, both in and out of the rings.

10. ADVANCEMENT IN OBEDIENCE AND AGILITY CLASSES- A youth will move up to a 'transition year', after they receive 2 purples in a specific class at county or state level competition. Youth will finish their 4-H year at the same level if the second purple ribbon occurs in the middle of their 4-H year. Youth do not have to move up in the middle of a 4-H year. Youth will then have the option to stay in their current class for one additional year (after receiving 2 purple ribbons) called the 'transition year'. During the transition year, youth will practice the more advanced class (gaining skills such as off leash work) but may compete in their same level. Youth may advance up to the next level more quickly with advice/assistance from a leader and parent to help evaluate skill and readiness of youth and dog. This may especially occur if the youth has had previous dog handling experiences.

11. ADVANCEMENT IN SHOWMANSHIP CLASSES- classes are divided into age divisions.

12. SUBSTITUTIONS-A dog may be substituted for showmanship classes only if it is injured or dies following the entry deadline. Substitutions are generally not allowed in obedience and agility classes however, substitutions may be considered at the discretion of the state fair superintendents. A substitute can be selected from the exhibitor's household family or from the household where the originally entered dog resides. Dog(s) may be substituted only if a superintendent is directly consulted prior to the show date. A Nebraska State Fair Dog Show Vaccination Form (SF 263) must be completed for all substitution dogs and received by the superintendent prior to the show date.

13. NUMBER OF ENTRIES PER EXHIBITOR- Currently, for State Fair: Youth may enter one showmanship class, two agility classes (using different dogs and in different level of classes), and two obedience classes (using different dogs and in different level of classes). Fairs, shows, and fun matches may establish entry guidelines according to the number of classes offered, number of exhibitors, facility and number of rings, days of events, judges, and interest.

14. USE OF LEASH – dogs are to remain on leash at all times except under the direction of a judge while performing a class in the show ring.

APPEALS PROCESS

If there are differences of opinion among exhibitors, leaders and show administrations in competitive events, an appeals committee is one way to resolve differences fairly with minimum tension.

To handle protests at the State Fair, the respective superintendent has the authority to make appropriate decisions based on the Guidelines for Nebraska State 4-H Dog Shows. When needed, a committee shall be appointed to serve as a protest review group. It will meet when needed to act upon concerns.

A. All protests must be submitted in writing and signed.
B. The written protest must be submitted to the State Fair 4-H Management Team and must include:
    1. names of persons involved
    2. nature of concerns
    3. situation and documentation
    4. recommendations for correction
    5. specific action, rule, etc., in question
    6. additional persons the committee may contact for further clarification
    7. procedures and/or steps carried out by the person involved prior to submission of the protest to the State Fair 4-H Management Team
C. The committee will review the written protest and may discuss the situation with affected persons and show officials, including Nebraska State Fair management. Recommendations will be developed, followed and communicated both verbally and in writing to the group or individual affected.
D. In cases of protest, the exhibitor may be allowed to show, but results of the showing will be subject to change based on the outcome of the protest process. This allows for smooth operation of the show and facilitates appropriate processing.
E. The management reserves the right to withhold premium and/or award. The exhibitor may be excluded from the show if action warrants.
F. Protests will not be accepted after the exhibit is released from the State Fair 4-H Division.
G. Protests related to judges' integrity, decisions, placings or other evaluations will not be accepted.

SHOW MANAGEMENT

Volunteers are key to the 4-H program and all efforts are greatly appreciated and invaluable to host a show or fun match. Some of these volunteer roles include:

- Superintendent – help coordinate the volunteers and the judges
- Announcer – help keep the show moving, announce next class and have exhibitor's waiting at the gate. Work closely with Ring Steward, Clerks, and Judge for necessary announcements
- Ring Steward – help direct exhibitors and check in exhibitors at the gate

- Clerk – fill out necessary paperwork and check tabulations
- Timer – time and document the exhibitor timed information
- Ring Crew – help set up and re-set rings as needed. Help keep flow of show moving
- Additional roles are helpful and may be added to meet the needs of the particular show

PREPARING FOR THE SHOW

1. MAINTENANCE OF THE SHOW DOG:

A. Feeding – An appropriate feeding schedule should be maintained for each dog. The 4-H member should consult experts, such as breeders or veterinarians, to establish the proper amount and kind of food best suited for the dog.

B. Veterinary Recommendations – Consult a veterinarian. Physical exams at regular intervals and regular checks for internal and external parasites are essential. Seek nutritional and exercise recommendations for the dog.

C. Dog Care and Grooming - Attend to teeth, nails and ears often to help the dog stay in excellent health. Groom and trim the dog as necessary for breed and hair coat.

D. Vaccination Schedule – Consult a veterinarian to establish a vaccination schedule for the dog according to label guidelines

E. Practice Training Routines – Participate in club or county practice meetings for classes offered (obedience, showmanship, agility, etc.). Regular practice at home and at a variety of locations will increase the success of dog training.

2. DRESS CODE IN THE RING:

A. Solid blue jeans are required. No headgear is worn in the show ring. In 4-H shows, the exhibitors are generally required to wear identification such as a 4-H T-shirt, or white shirt, with chevron or arm band. For State Fair, the State Fair shirt is required and exhibitors should not display local, county, commercial, identification promoting a product, breed or organization or a 4-H club/county in the show ring while showing at state fair. Dress codes within a county may vary as counties may adopt a county 4-H shirt or allow youth to wear 4-H club t-shirts at local shows.

B. Closed toed shoes with a non-slip sole are required. No flip flops or sandals are allowed.

C. A jean's pocket is helpful for such things as comb, brush and drooling towel, thereby freeing both hands for showing the dog. However, it is optional for exhibitors to carry these items into the show ring.

D. Exhibitors should always look neat, clean and well-groomed. Any distractions, such as loose hair, distracting jewelry, clothing other than that directed by the dress code or show superintendent, and caps or hats will result in deduction of points by the judge.

E. A show superintendent may rule that circumstances (i.e., inclement or hot weather) warrant a relaxation of the dress code rules.

3. SHOW PREPARATION AND EQUIPMENT:

A. Dog Cleanliness – Bathe and groom the dog(s) at home prior to the show.

B. Crate – This is optional but if used, it should be large enough to house the dog comfortably.

C. Food and Water – The animal will need a pan for food and water during the stay away from home. Water from home may keep the dog from having diarrhea. Food to which the dog is accustomed should be taken to the show.

D. Exercise Pen – Public exercise areas are usually available at the show. Exhibitors are responsible for keeping their area clean.

E. Show Leash and/or Training Collar, Leather or Fabric – These should be appropriate for the class. (flat collar/buckle collar, martingales, chain collar, leather or nylon leashes).

F. Grooming Table with Post – These are advantageous but not required.

G. Grooming Equipment – This includes towels, brushes, combs, scissors, clippers, either dry or wet shampoo and nail trimmers. (Trimming nails is best done before the show. The dog may limp if the nails are trimmed too short the day of the show.)

H. Tack/Supply Boxes – These are available in many sizes, but any type of box is suitable.

I. First-aid Equipment – Include first-aid equipment with the show equipment.

J. Folding Chairs – These can be very handy during lengthy shows.

K. Checklist – Avoid the inconvenience of a forgotten item by making a list of equipment and checking it carefully before leaving home.

L. Arrival Time - All exhibitors should arrive early and first check-in at the registration area. They should then check in at their assigned ring(s) 30 minutes prior to judging.

4. SPORTSMANSHIP:

Showing dogs is a great sport. Good sportsmanship is expected of exhibitors, their families and friends at all times. Being pleasant and respectful of others is as important in the grooming area and at the ring side as it is in the ring.

A positive attitude will be transmitted to the dog, the judge and spectators. Poor manners or ill temper is not appropriate at the show. Exhibitors should have a winning attitude regardless of placement in the class. Learning and participation are important parts of 4-H.

SHOWMANSHIP

PURPOSE OF SHOWMANSHIP

In showmanship classes, exhibitors are judged on their ability to groom and handle the dog in the show ring. Here is an example of a scorecard used to judge showmanship:

SCORECARD

1. **Handler's Appearance** ……..**10 points**

   A. Exhibitors must follow dress code rules as established for the specific fair or event.

2. **Dog Grooming and Conditioning** ……..**20 points**

   A. Hair Coat – The dog's coat should be clean, not scaly or matted, and free from loose hair. Special coat trims, such as those for poodles or terriers, will not give an advantage except for cleanliness and neatly brushed appearance.

   B. Total Absence of Parasites – The animal should not be a host to fleas, lice, mites or ticks.

   C. Ears – The animal's ears should be clean.

   D. Toenails – The animal's toenails should be properly trimmed.

   E. Teeth – The animal's teeth should be clean and free of matter.

   F. General Health and Condition – This includes the animal's weight and clear eyes free of matter.

3. **Handling – Showing of the Dog** ……**50 points**

   A. Movement of the handler and dog – The ability of the handler to show the dog to its best advantage. Smooth, straight and flowing gait at the correct speed.

   B. Coordination between dog and handler – Reaction of the dog to the handler and communication between dog and handler.

   C. Proper presentation and control of dog.

   D. Adherence to directions and proper ring procedures – This includes proper ring etiquette and good sportsmanship both in and out of the ring.

   E. Disqualification – A handler unable to control the dog will be disqualified.

4. **Knowledge of Dogs** ……**20 points**

   A. Knowledge of dogs specific to the 4-H project and breed of the dog it most closely resembles. The judge will converse with and/or question the exhibitor about the project and the dog.

TOTAL……..100 points

SCORING IN SHOWMANSHIP:

Placements will be as follows:

Purple	**95-100 points**
Blue	**85-94 points**
Red	**75-84 points**
White	**74 and less**

If multiple exhibitors in a class receive a perfect score, the judge has two options to break the tie. The judge will ask an additional dog knowledge question or ask exhibitors to run a different showmanship pattern. The judge will then will select a first-place winner. There will be no run down and back (with two exhibitors at the same time) to break ties in showmanship. The judge's decision is final.

SHOWING TIPS FOR THE 4-H'ER:

The dog should wear only the show collar and/or leash. The leash may be nylon or leather of a length and width appropriate for the dog and handler. If a separate collar is used, it should be a proper show collar, including a show hex or jeweler's link chain. The 6-foot obedience lead is not acceptable in showmanship.

Pictures of showmanship collars and leads –
Link Collars (not obedience chain collar) /Jewelers Hex chain (fine link) Nylon collar

Loop lead Martingale Slip collar with short leash/lead

Position the collar portion of the leash or collar around the animal's neck, just behind the ears. This will allow control of the dog without choking it.

Exhibitors should neatly hold the excess showmanship leash in their hand and not have any loops or ends dangling out visible from their hand.

4-H'ers is responsible for grooming their own dogs. Since grooming is part of the learning experience in the dog project, it is important for the exhibitors to know why their breeds may require special grooming.

The judge will ask questions of the 4-H'er about the dog and the project. Questions should be appropriate for the age division of the exhibitors. Some of the topic areas that a judge may use are dog care, grooming, health, exhibitor dog breed and country of origin, purpose of dog breed, AKC breed groups, vaccinations, parasites, dog parts, amount and type of feed, and 4-H Dog manuals Judges may also determine their own questions.

Judging will include evaluating the movement of the dog and exhibitor together. Exhibitors should move the dog in a straight and even gait, working together as a team. The exhibitors should be aware of the judge so they can react with the least amount of hesitation. They should avoid putting themselves between the dog and the judge (except for performing a courtesy turn at the beginning of their individual pattern). Unnecessary jerking, pulling or extremely loud commands are not acceptable.

Exhibitors should make their gaiting smooth, straight and at the correct speed. When in motion, the dog should move naturally and freely. Avoid traveling ahead of or behind your dog.

4-H Showmanship exhibitors should watch for the judge and show their dog for the duration of their class. Exhibitors should pay attention at all times and not cut in front of the judges view of the dog such as (European turns). The exception: if a youth decides to include a courtesy turn to be able to get their dog into better position before their pattern.

Courtesy Turns Are Optional – courtesy turns are optional and to be included or excluded at the choice of the exhibitor. Exhibitors should note that if they do include a courtesy turn, they need to keep good flow and smoothness or they may lose points. Exhibitors do not get extra credit for doing a courtesy turn. The purpose of a courtesy turn is to line up your dog to go straight away from the judge at the start of their pattern. The dog stays on the left side of the exhibitor and turns a small right handed circle only briefly blocking the judge's view of the dog. Not all dogs are easily directed through a courtesy turn so it may be better to exclude it. If used, the courtesy turn is done in front of the judge at the start of their pattern or as noted for a specific pattern.

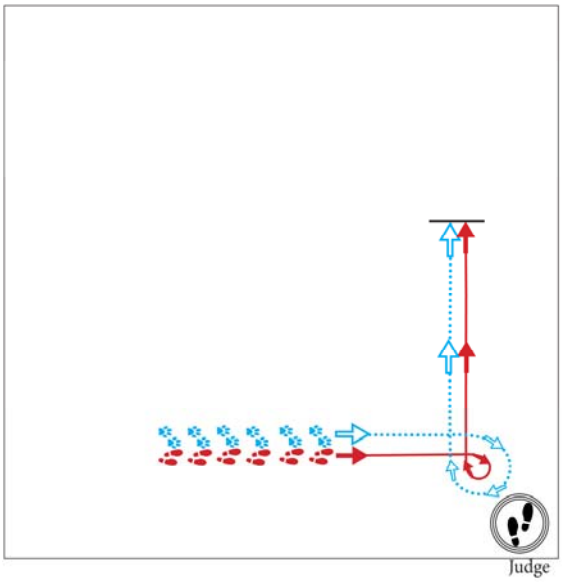

Courtesy turn

Exhibitors in Showmanship should hold their lead in the hand that is beside the dog.

Use the entire ring unless the judge gives other instructions.

If mats are used, the dog should be centered on the mat while the exhibitor off to the side (if the mat is wide enough, the exhibitor should still be on the mat).

The dog is to be kept between the judge and exhibitor at all times.

In showmanship, the exhibitor's appearance is as important as the dog's grooming. The handler's hair should be off the face and contained if necessary. Anything in clothing, grooming or behavior that distracts from the presentation of the dog is not appropriate.

SHOWMANSHIP CLASSES: Showmanship is divided by exhibitor's age:

Junior SHOWMANSHIP - (8 - 9 year olds)
Intermediate SHOWMANSHIP- (10 – 13 year olds)
Senior SHOWMANSHIP- (14 – 18 year olds)

RING PROCEDURE:

The judge will examine each dog individually for grooming and condition. When setting up the dog for the individual examination or when in line, try to stack or position the dog according to the breed standard. A table should be available for small dogs. Mixed breeds should be positioned according to the breed standard the dog most closely resembles.

Each exhibitor and dog will be asked to do one of the following patterns chosen by the judge. 4-Her's should be familiar with all the patterns designated for each age division and should follow the judge's direction.

SHOWMANSHIP PATTERNS _ Showmanship patterns are split according to complexity so that oldest youth ages 14 and older may be asked to run any of the showmanship patterns while the youngest youth will do the less complex patterns.

Junior SHOWMANSHIP - (8 - 9 year olds) - down and back, regular triangle (not reverse), L patterns.
Intermediate SHOWMANSHIP- (10 – 13 year olds) – down and back, all triangles, all L patterns.
Senior SHOWMANSHIP- (14 – 18 year olds) - Any of the patterns.

SHOWMANSHIP PATTERN DIAGRAMS – each of the showmanship patterns are noted with illustration on how to run them. Youth position and dog position are noted as well as the use of a 'hand illustration' which indicates that the leash changes hands.

1. **Down and Back or Straight Away:** The exhibitor and dog will be asked to gait across the ring either on the diagonal or from end to end. At the opposite end of the ring, the exhibitor has the option to do (1) an about turn or (2) to switch hands with the lead.

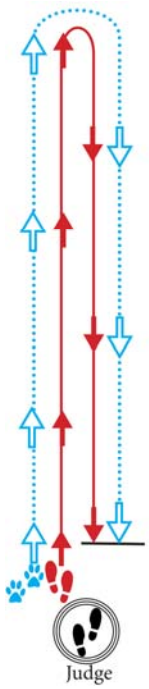

The Down and Back with an about-turn.

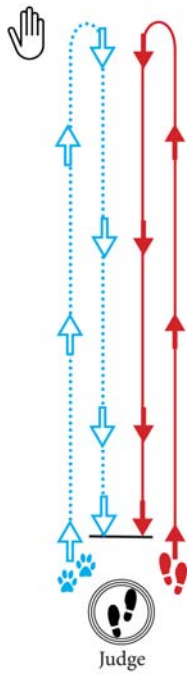

The Down and Back with a hand switch.

2. **Triangle:** This pattern is performed in the shape of a right triangle. The exhibitor and dog will proceed in a straight line away from the judge to the opposite end of the ring. At the corner, the dog and handler will make a left turn and proceed all the way to the next corner. Once at the corner, one of two turns may be made before proceeding up the diagonal and back to the judge. Under no circumstances may a judge direct an exhibitor to do a reverse triangle where the exhibitor would go down the diagonal first as the pattern ends with the diagonal.

There are two options for the triangle pattern:

The first option is a simple turn at the corner followed by a second simple turn and then return diagonally to the judge.

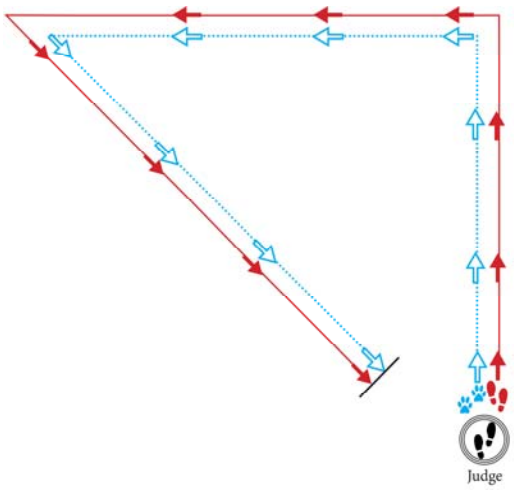

Triangle with simple turn at the corner.

Triangle with a circle at the corner.

The second option is for the 4-H'er to switch hands with the lead and cross the dog over in front of him/her. The dog completes a circle as the 4-H'er and dog turn into/toward each other and proceed up the diagonal with the dog on the 4-H'ers right side.

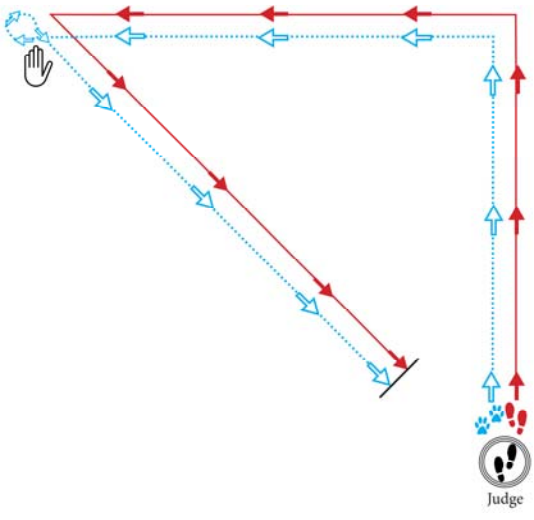

Triangle where 4-H'er switches hands with the lead.

2b. **Reverse Triangles**: Exhibitors will reverse the two options (shown above) moving straight away from the judge and then turn to their right followed by another right turn and then moving back to the judge.

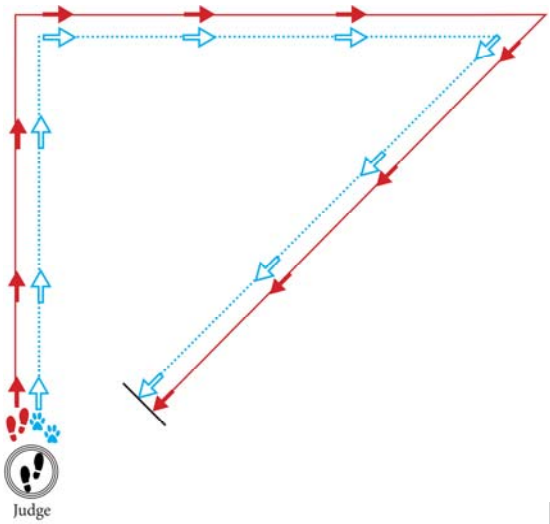

Reverse Triangle with simple turn at the corner.

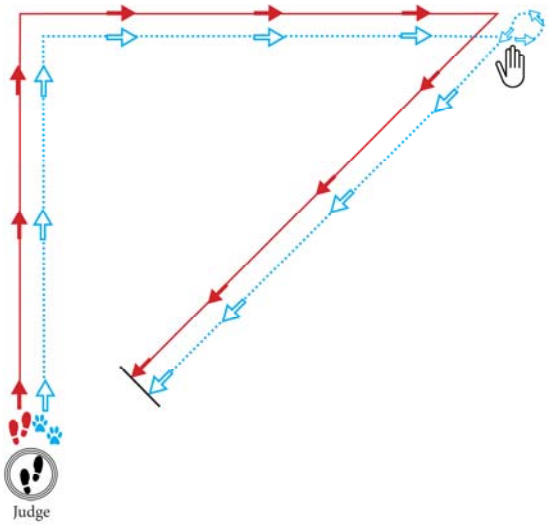

Reverse Triangle where 4-H'er switches hands with the lead.

3. L Pattern: This pattern is performed in the shape of an uppercase letter “L”. The exhibitor and dog will proceed in a straight line away from the judge to the opposite end of the ring. At the corner make a left turn and proceed all the way to the next corner. The exhibitor then switches hands with the lead. The exhibitor and dog turn into/toward each other and proceed back to the other end of the ring. At this corner, the exhibitor has two options either a simple right turn or to make a circle in the corner.

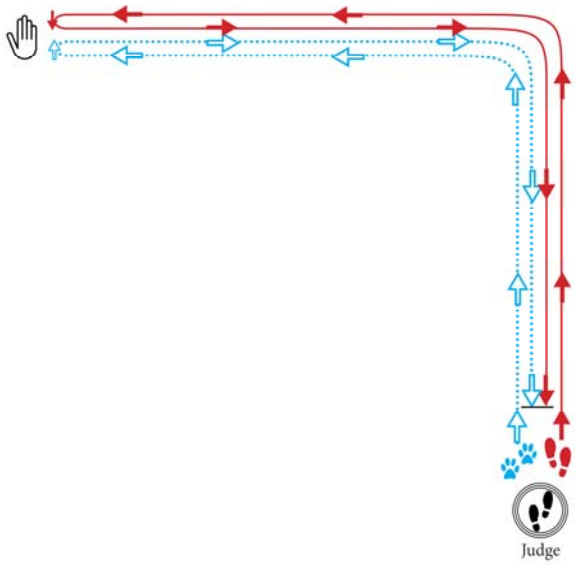

The “L” pattern with a simple turn.

The second option is to make a circle in the corner (right before returning to the judge) with the dog always remaining on the exhibitor’s right side. The exhibitor does not switch hands with the lead while making the circle.

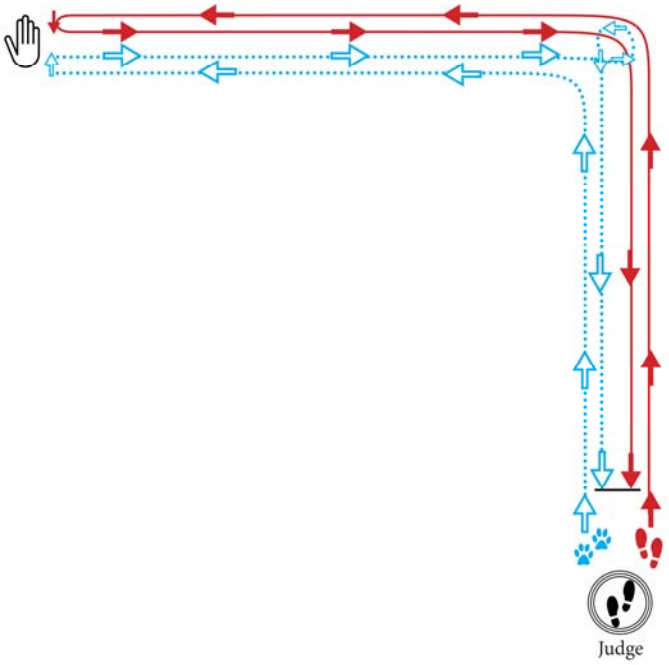

The “L” pattern with a circle.

3b. **Reverse L:** The exhibitor and dog will proceed in a straight line away from the judge to the opposite end of the ring. At the corner make a right turn and proceed all the way to the next corner. The exhibitor then switches hands with the lead. The exhibitor and dog turn into/toward each other and proceed back to the other end of the ring. At this corner, the exhibitor has two options either a simple left turn or to make a circle in the corner.

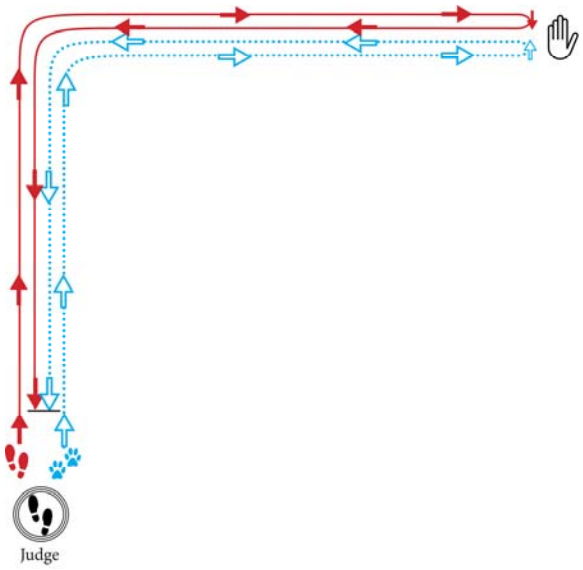

The Reverse “L” pattern with a simple turn.

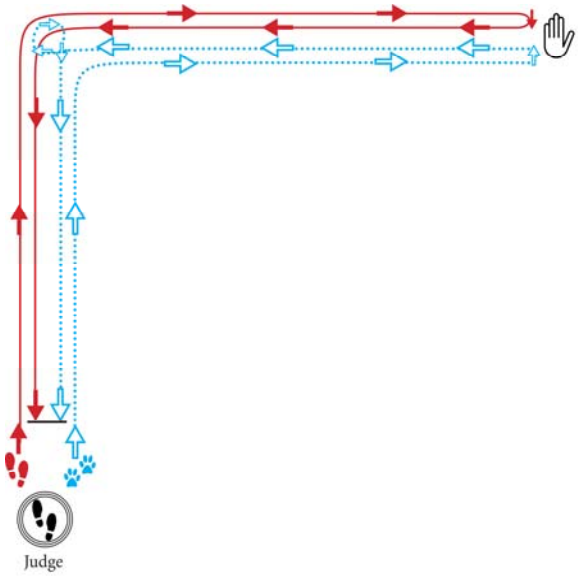

The Reverse “L” pattern with a circle.

The easiest option is to do the “L” pattern or Reverse “L” pattern with a simple turn and then proceed back to the judge. The exhibitor does not switch hands with the lead and the dog stays on the same side of the exhibitor.

4..T & Advanced Variations (Left T or Right T): – This pattern is performed in the shape of an uppercase letter “T”. The judge will indicate where to start the “T” pattern. The exhibitor and dog will proceed in a straight line away from the judge to the opposite end of the ring. The exhibitor should turn to whichever side the dog is on and proceed to the corner of the ring. The exhibitor then switches hands with the lead. The exhibitor and dog turn into/toward each other and proceed to the other end of the ring. At the other end, the exhibitor again switches hands with the lead. The exhibitor and dog again turn into/toward each other and proceed back to the center of the ring. The exhibitor then turns back toward the judge and proceeds in a straight line back to the judge.

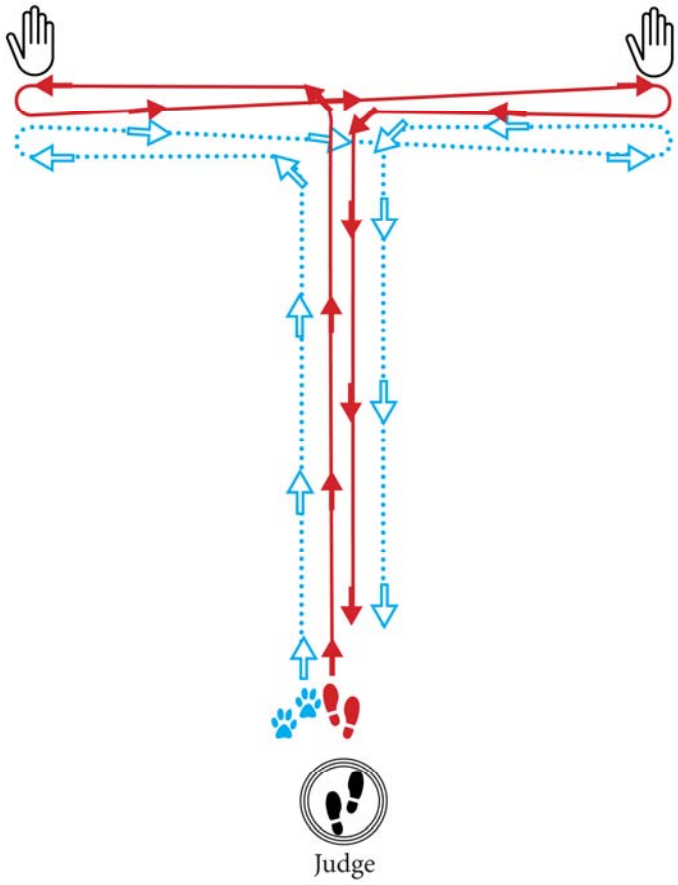

The “T” pattern.

5. **“I” Pattern:** - A This pattern is performed in the shape of an uppercase letter “I”. The judge will indicate where to start the “I” pattern. The exhibitor and dog will proceed in a straight line away from the judge following the “I” pattern. The exhibitor then switches hands with the lead and direction changes as noted. Near the end of the pattern, the exhibitor then turns back toward the judge and proceeds in a straight line back to the judge.

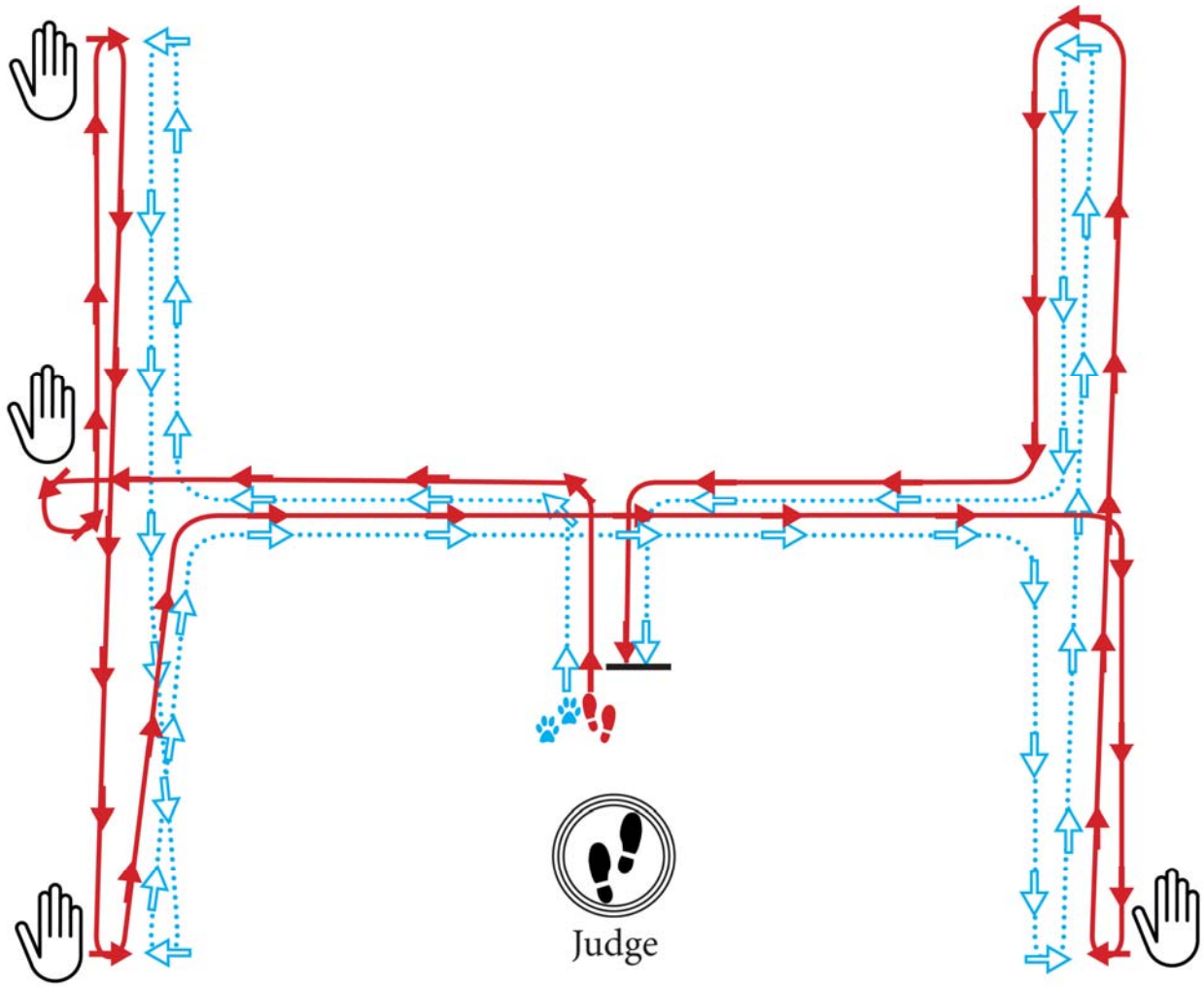

The “I” Pattern

GROUP GAITING - THE GO AROUND: When moving the dog in an “all go around,” the handler should make certain to leave plenty of room between his/her dog and the dog ahead. Handlers should use the full size of the show ring. The handler should attempt to keep the dog moving at a suitable speed. The handler moves the dog around the ring, usually in a counterclockwise direction. Allow the dog to gait freely, with no jerking of the dog’s neck by the handler. If the dog in front is moving slowly and it is difficult to gait at the correct speed, the handler should hold back and make space. Then, when it is the handler’s turn to gait in front of the judge, there will be enough room to move. The group gaiting is normally at the beginning of a class and then the judge asks the lead dog to stop and everyone will stack their dog. The judge may also ask the exhibitors to group gait at the end of a class for final viewing before results are announced. Dogs should be stacked around the edge of the show ring creating a curve in the corner so none of the exhibitors are blocked from the view of the judge.

STACKING ON TABLE – A dog should be placed with their front legs on the edge of the table with their head over the edge. The dog's legs should be centered on the edge of the table (not at the corner of the table). Small sized dogs should utilize the table for judge's examination. Exhibitors can check breed standard information to determine if their dog is placed on the table. Mixed breed dogs should follow the breed their dog most resembles. Exhibitors should practice lifting dog to the table.

STACKING IN SHOWRING – Exhibitors should avoid stacking their dog in the corner of the ring as the judges view of their dog will be obstructed. Exhibitors may create a curve around the corner so that all dogs are visible to the judge. Exhibitors should stack their dogs in a straight line. Exhibitors may kneel beside their dog as they prefer (to project the image they prefer to the judge) and go down on one knee with the knee down that is away from the head of the dog. Exhibitors should hold the dogs tail according to breed standards if the dog does not naturally hold their tail. Exhibitors may reach over or under their dog to set up the feet (at the choice of the youth). Exhibitors should consider the size of the dog and either way is acceptable. Move feed with smoothness and block judges view minimally.

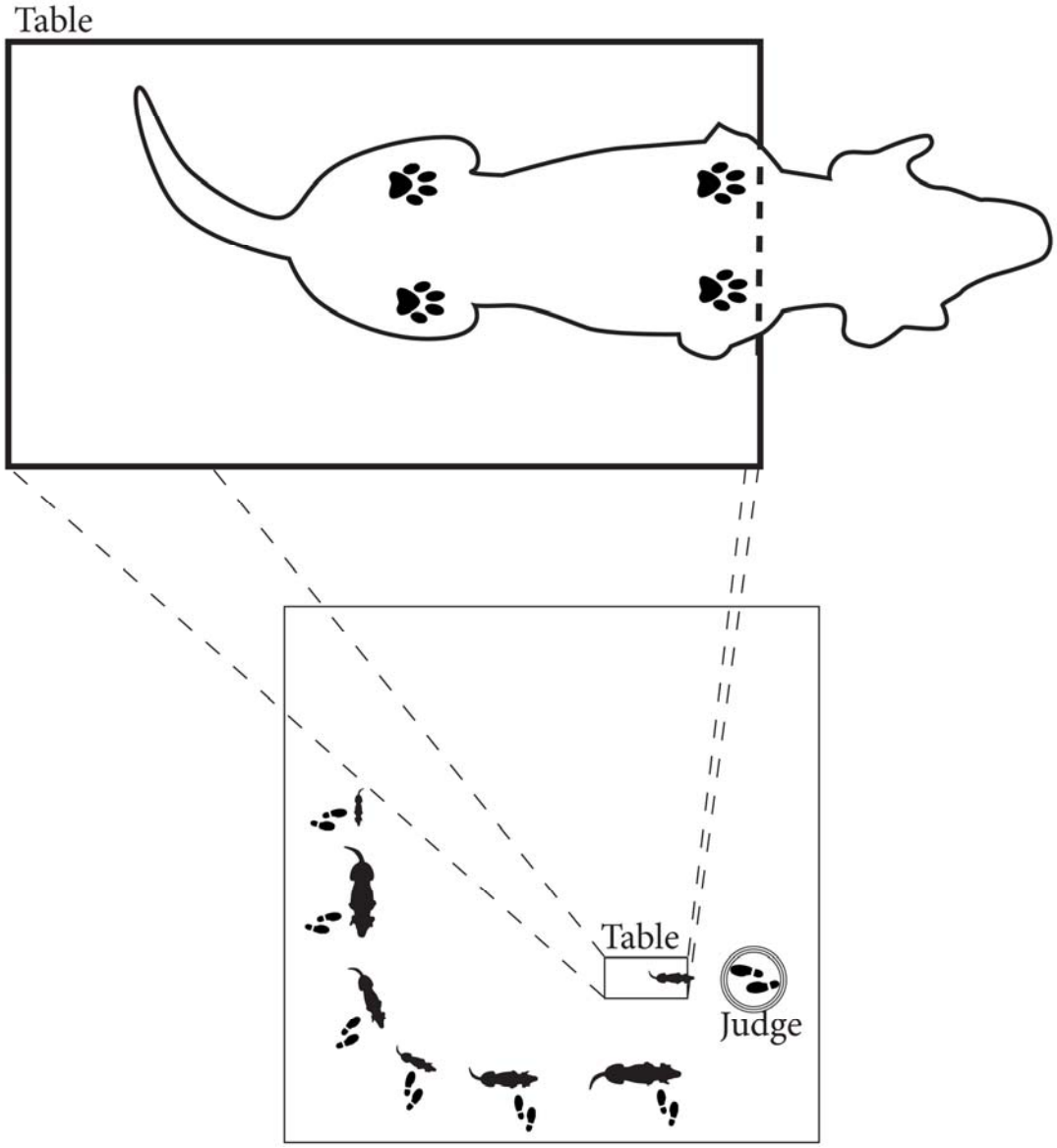

Stacking on Table (Top) and Stacking in Show Ring (Bottom)

COMPLETION OF PATTERN – Exhibitors should stop 2 – 3 feet from the judge. Judges may also signal the exhibitor to stop. Most breeds should stop and stand with all four feet square. Exhibitors should not use hands to move a dog's feet. At the direction of the judge, exhibitors are usually asked to make a large circle around the outer edge of the ring before moving back into the line.

SUMMARY:

The 4-H member and dog are being judged as a team. The dog is not to be judged on its conformation.

The judge's decision is final.

OBEDIENCE

PURPOSE OF OBEDIENCE

The purpose of obedience is to teach the dog to obey the handler. In obedience classes, the dog is not judged on its appearance, but on how well it performs specific exercises. The difficulty of these exercises increases with each obedience level.

GENERAL GUIDELINES:

1. A dog may enter in only one obedience class in a competition. An exhibitor may enter multiple dogs according to show guidelines.

2. The dog and handler are not allowed to enter the show ring before the class.

3. Baiting the dog with food, squeakers, or toys will not be permitted in any class and is cause for disqualification.

4. In case of a tie, a sudden death runoff on the heel exercise (on leash unless entered in novice or above) will be used to determine the winner.

5. Shows may elect to start with individual workouts followed by sits/downs or the show may start with sits/downs and then move to individual workouts to complete class work.

CLASSES AND SCORECARDS:

Dogs with AKC degrees will show as follows:

"CD" degree must show in Graduate Novice or higher.

"CDX" or "UD" degree must show in Open or Utility.

There is no limit on the number of years a dog may be shown in the Utility Class.

BEGINNING NOVICE A & B

All exercises must be performed on a 6-foot leash. Dogs must heel including figure 8; stand for examination; come on recall; long sit for one minute and long down for three minutes. During the sit and down exercise, the leash must be held by the handler.

Division A – Both handler and dog are in their first year of county, state or any other dog experience. Dogs being shown may not have completed an AKC "leg" toward a "CD" degree. For example, exhibitors in their second year of county competition are not eligible for Division A, even though this is their first year at State Fair.

Division B – Exhibitor or dog is beyond first year of competition. This class also includes dogs that have been shown previously by others, but have not moved past the beginning novice level.

BEGINNING NOVICE A & B – All on leash exercises.

	Possible Points
Heel on Leash and Figure 8	**40**
Stand for Examination	**30**
Recall	**30**
Long Sit (1 minute)	**30**
Long Down (3 minutes)	**30**
Total	**160**

NOVICE

Dogs must heel on leash including figure 8; stand for examination off leash; heel free; come on recall off leash; long sit for one minute off leash and long down for three minutes off leash with handler across the ring.

	Possible Points
Heel on Leash and Figure 8	**40**
Stand for Examination Off Leash	**30**
Heel Free	**40**
Recall Off Leash	**30**
Long Sit (1 minute) Off Leash	**30**
Long Down (3 minutes) Off Leash	**30**
Total	**200**

GRADUATE NOVICE

Dogs must heel on leash; stand for examination off lead, heel free including figure 8; drop on recall off leash; long sit off leash for 3 minutes and long down off leash for 5 minutes both with handler out of sight.

	Possible Points
Heel on Leash (no Figure 8)	3**0**
Stand for Examination Off Lead	**30**
Heel Free and Figure 8 Off Lead	**40**
Drop on Recall	**40**
Long Sit (handler out of sight 3 minutes)	**30**
Long Down (handler out of sight 5 minutes)	**30**
Total	**200**

ADVANCED GRADUATE NOVICE
Dogs must heel on leash and figure 8 (off leash), drop on recall, dumbbell recall, recall over high jump, recall over broad jump, and long down.

	Possible Points
Heel on Leash and Figure 8 Off Lead	4**0**
Dumbbell Recall	30
Recall Over High Jump (3/4 height at withers with a minimum 4 inches and maximum 26 inches)	30
Recall Over Broad Jump (twice the height of the high jump)	30
Drop on Recall	**40**
Long Down (handler out of sight 5 minutes)	**30**
Total	**200**

OPEN

All exercises off leash. Dogs must: heel free and figure 8; drop on recall; retrieve on flat; retrieve over high jump; broad jump; long sit for 3 minutes and long down for 5 minutes, both with handler out of sight. For more information, refer to the Jump Heights section in this guidebook.

	Possible Points
Heel Free and Figure 8	**40**
Drop on Recall	**30**
Retrieve on Flat	**20**
Retrieve over High Jump (3/4 height at withers with a minimum 4 inches and maximum 26 inches)	**30**
Broad Jump (twice the height of the high jump)	**20**
Long Sit (handler out of sight 3 minutes)	**30**
Long Down (handler out of sight 5 minutes)	**30**
Total	**200**

GRADUATE OPEN – includes - signal exercise, scent discrimination, directed retrieve, moving stand and examination, go out, and directed jumping.

	Possible Points
Signal Exercise	40
Scent Discrimination	30
Directed Retrieve	30
Moving Stand and Examination	30
Go Out	30
Directed Jumping (3/4 height at withers with a minimum 8 inches and maximum 28 inches)	40
Total	200

UTILITY

All exercises must be off leash. The dogs will perform five exercises; the signal exercise; the scent discrimination exercise with leather and metal objects; the directed retrieve; moving stand and examination' and directed jumping. Exhibitors must supply their own scent articles and gloves for the directed retrieve.

	Possible Points
Signal Exercise	**40**
Scent Discrimination-leather article	**30**
Scent Discrimination-metal article	**30**
Directed Retrieve	**30**
Moving Stand and Examination	**30**
Directed Jumping (3/4 height at withers with a minimum 8 inches and maximum 28 inches)	**40**
Total	**200**

SCORING IN OBEDIENCE:

Partial Credit for Sits and Downs - Partial credit will be given for all classes that have sits and downs. This will be designated on the score sheets. Judges will also score other infractions and note any point losses on the scoresheet. A dog needs to be completely successful with sit and down (until Judge calls the exercise completed) to qualify for a purple ribbon. Exhibitors will receive no more than these points for:

For Beginning Novice A & B Obedience, & Novice -
-Beginning Novice - Purple ribbons are awarded for 150 – 160 points.
-Novice – Purple ribbons are awarded for 180-200 points.

Exhibitors will receive no more than these points for:
30 points – for completing the whole exercise (sit)
20 points – for completing 60 seconds of the exercise (sit)
10 points – for completing 30 seconds of the exercise (sit)

30 points – for completing the whole exercise (down)
20 points – for completing 3 minutes of the exercise (down)
10 points – for completing 90 seconds of the exercise (down)

For Graduate Novice, Advanced Graduate Novice, & Open

Exhibitors will receive no more than these points for:
30 points – for completing the whole exercise (sit)
20 points – for completing 3 minutes of the exercise (sit)
10 points – for completing 90 seconds of the exercise (sit)

30 points – for completing the whole exercise (down)
20 points – for completing 5 minutes of the exercise (down)
10 points – for completing 2.5 minutes of the exercise (down)

-Even though Graduate Open and Utility do not have long sits and downs it is recommended to include them as part of the training and practice sessions.

Beginning Novice:

Purple	**150-160 points**
Blue	**136-149 points**
Red	**112-135 points**
White	**111 points**

All Other Classes:

Purple	**180-200 points**
Blue	**160-179 points**
Red	**140-159 points**
White	**139 points**

REGULATIONS FOR PERFORMANCE

Ring

The suggested ring size for an indoor show is 35 feet wide and 50 feet long for all obedience classes. The floor shall have a surface or covering that provides firm footing for the largest dogs. Rubber or similar non-slip material must be laid for the takeoff and landing at all jumps unless the surface, in the judge's opinion, does not require it.

At an outdoor show or trail, the suggested ring size is 40 feet wide and 50 feet long. The ground must be clean and level, and the grass, if any, shall be cut very short. For the Graduate Novice and Open classes, the superintendent is responsible for providing an appropriate place, approved by the judge, for the handlers to go to be completely out of sight of their dogs. If inclement weather at an outdoor trial necessitates the judging of obedience under shelter, the ring size requirements should be adjusted.

Use of Leash

All handlers should use a 6-foot leash. Keep all dogs on leash (except when in the obedience ring as directed by the judge for off leash work). Bring dogs into the ring when brought in to receive awards and when waiting in the ring before and after the group exercise. (Leave the leash on the judge's table between the individual exercises and during all exercises).

Collars

Dogs in the obedience ring must wear properly fitted collars approved by the judge. Collars with prongs or spikes on the inside or outside, electronic collars, special training collars or collars that are either too tight or so large as to hang down unreasonably in front of the dog are not permitted. Nothing shall be hanging from the collars.

Misbehavior

Any discipline by the handler in the ring, any display of fear or nervousness by the dog, any uncontrolled behavior of the dog such as snapping, barking, or running away from its handler, whether it occurs during an exercise, between exercises, or before or after judging must be penalized according to the seriousness of the misbehavior. The judge may expel or excuse any dog from further competition for these and other misbehaviors. Overly aggressive dogs will be expelled or excused.

Commands and Signals

Whenever a command or signal is mentioned in these guidelines, the handler may give either a signal voice command or signal. Any extra commands or signals must be penalized. When the guidelines specify "command and/or signal," the handler may give either one or the other or both command and signal simultaneously. When a signal is permitted and given, it must be a single gesture with one arm and hand only. The arm must immediately be returned to a natural position. Delay in following a judge's order to give a command or signal must be penalized, unless the delay is directed by the judge because of some distraction or interference.

The signal for downing a dog may be given either with the arm raised or with a downswing of the arm. Any pause in holding the arm upright followed by a downswing of the arm will be considered an additional signal.

Handler's loud commands create a poor impression of obedience and should be avoided. Shouting is not necessary even in a noisy place if the dog is properly trained to respond to a normal tone of voice. Commands that are, in the judge's opinion, excessively loud will be penalized.

Heel Position

The heel position, as used in these guidelines, means that the dog shall be straight in line with the direction in which the handler is facing, at the handler's left side and as close as practical to the handler's left leg without crowding – the handler needs freedom of motion at all times, whether the dog is sitting, standing or moving at heel. The area from the dog's head to shoulder shall be in line with the handler's left hip.

Heel on Leash

The handler shall enter the ring with the dog on a loose leash and shall stand with the dog sitting in the heel position until the judge asks if the handler is ready and then gives the order, "Forward." The handler may give the command or signal to Heel, and shall start walking briskly and in a natural manner with the dog on loose leash. The dog shall walk close to the left side of the handler without crowding, permitting the handler freedom of motion at all times. At each order to "Halt,' the handler will stop and the dog shall sit straight and in the Heel position without command or signal and shall not move until the handler again moves forward on order from the judge. It is permissible after each Halt for the handler to give the command or signal to Heel before moving again.

At the handler's option, the leash may be held in either hand or in both hands, provided the hands are in a natural position. However, the handler and dog will be penalized if, in the judge's opinion, the leash is used to signal or give assistance to the dog. Any tightening or jerking of the leash or any act, signal or command which, in the judge's opinion, gives the dog assistance shall be penalized.

The judge will give the orders "Forward," "Halt," "Right Turn," "Left Turn," "About Turn," "Slow," "Normal" and "Fast," which signify that both the handler and dog must run, change pace and move

forward at a noticeably different pace. These orders may be given in any sequence and may be repeated if necessary. In executing the About Turn, the handler will do a Right About Turn in all cases. The judge will say, “Exercise finished,” after the heeling and then, “Are you ready?” before starting the Figure 8.

The judge will order the handler to execute the Figure 8. On this order, the handler may give the command or signal to Heel and, with the dog in the heel position, shall walk around and between two stewards standing about 8 feet apart. If there is only one steward, the contestant shall walk around and between the judge and the steward. The Figure 8 in the Novice classes shall be done on leash only. The handler may choose to go in either direction. There shall be no About Turn in the Figure 8, but the handler and dog shall complete the Figure 8 twice, with at least one Halt during and another Halt at the end of the exercise.

Stand for Examination

The judge will give the order to “Stand for Examination.” The handler, without further order from the judge, will stand or pose the dog off leash, give the command and/or signal to stay, walk forward about 6 feet in front of the dog, turn around and stand facing the dog. The method by which the dog is made to stand or pose is optional, and the handler may take any reasonable time in posing the dog before deciding to give the command and/or signal to stay.

The judge will approach the dog from the front while presenting the back of their hand to the dogs nose first then will touch its head, body and hindquarters only or run hand down dog’s back. The judge will then give the order, “Back to your dog.” The handler will then walk around behind the dog to the heel position. The dog must remain in a standing position until the judge says, “Exercise finished.” The dog must show no resentment at any time during the exercise.

Heel Free

This shall be executed in the same manner as Heel on Leash except the dog is off the leash.

Recall

To execute the Recall to the handler, the judge will order or signal the handler to “Leave your dog.” The dog is then given the command and/or signal to stay in the sitting position while the handler walks forward toward the other end of the ring, turns around and faces the dog. Upon the “Call your dog” order or signal from the judge, the handler calls or signals the dog.

In the Novice class, the dog must come directly in at a brisk pace and sit straight, centered immediately in front of the handler’s feet and close enough so that the handler could readily touch its head without moving either foot or having to stretch forward. The dog shall not touch the handler nor sit between his or her feet. Upon order or signal from the judge to “Finish,” the dog on command or signal must go to the heel position and sit. The method by which the dog goes to the heel position shall be the handler’s option, provided it is done quickly and the dog sits straight at Heel.

Drop on Recall

In the Graduate Novice and Open classes, the dog must drop completely to a down position immediately on only one command or signal from the handler at a point designated by the judge. The dog must remain in the down position until, on order or signal from the judge, the handler calls or signals the dog. The animal must then rise and complete the exercise as in the Novice class.

Dumbbell Recall

This exercise will be performed like the Novice Recall but with the dog holding the dumbbell. In addition to the Novice Recall, the dog will promptly take, hold and deliver the dumbbell when commanded. The judge's orders are: "Give your dog the dumbbell," "Leave your dog," "Call your dog," "Take it" and "Finish." The handler will stand with the dog sitting in the heel position in a place designated by the judge. When the judge orders "Give your dog the dumbbell," the handler will present the dumbbell with one command. The dog must accept it readily and hold it. When the judge orders, the handler may give the command and/or signal to stay and will walk forward to the other end of the ring and turn to face the dog. On the judge's order or signal, the handler will command or signal the dog to come. The dog must come directly at a brisk trot or gallop. When the dog is sitting in front of the handler, the judge will order "Take it," and the handler will give a command and take the dumbbell. The finish will be done as in the Novice Recall. All appropriate penalties of the Novice Recall and Open Retrieve on Flat shall apply.

Long Sit

All the competing dogs in the class take the Long Sit exercise together. If there are 12 or more dogs, however, the judge has the option to judge groups of not less than six nor more than 15 dogs. If the same judge does both classes, the separate classes may be combined, provided there are not more than 15 dogs competing in the combined classes.

The dogs in the ring shall be lined up in catalog order along one of the four sides of the ring.

On order from the judge, the handlers shall sit their dogs, if they are not already sitting. On further order from the judge to "Leave your doges," the handlers shall give the command and/or signal to Stay and immediately leave their dogs, go to the opposite side of the ring, and line up facing their respective dogs. After 1 minute elapses, the judge will order the handlers, "Back to your dogs." The handlers must then return promptly to their dogs and walk around the dog to the heel position. The dogs must not move from the sitting position until after the judge says, "Exercise finished."

Long Down

In the Novice classes, the Long Down is done in the same manner as the Long Sit. Instead of sitting, however, the handlers, on order from the judge, will down their dogs without touching them. The judge will order the handlers back after 3 minutes. The dogs must stay in the down position until after the judge says, "Exercise finished."

Graduate Novice, Advanced Graduate Novice, Open Classes – Long Sit and Long Down

These exercises are performed in nearly the same way as in Novice. After leaving their dogs, the handlers must cross to the opposite side of the ring, leave the ring in single file as directed by the judge that is completely out of sight of their dogs.

Handlers must remain in this designated area until called by the judge after the expiration of the time limit of 3 minutes in the Long Sit and 5 minutes in the Long Down. On order from the judge, the handlers shall return to the ring in single file in reverse order and line up facing their dogs across the ring.

Retrieve on the Flat

In retrieving the dumbbell on the flat, the handler stands with the dog sitting in the heel position in place designated by the judge. Upon orders from the judge to “Throw it,” the handlers may give the command and/or signal to Stay – which may not be given with the hand that is holding the dumbbell – and throw the dumbbell. A handler must wait for orders from the judge before executing each subsequent movement. With the order, “Send your dog,” the handler gives the signal or command to the dog to retrieve. After the order, “Take it,” the handler may give a command or signal and take the dumbbell from the dog. Following the final order “Finish,” the handler gives the command or signal to heel as in the Recall. The dog shall not move forward to retrieve nor deliver to hand on return until given the command or signal by the handler following the order by the judge.

The retrieve shall be executed at a fast trot or gallop, without unnecessary mouthing or playing with the dumbbell. The dog shall sit straight, centered immediately in front of its handler’s feet and close enough so that the handler can readily take the dumbbell without moving either foot or having to stretch forward. The dog shall not touch the handler nor sit between his or her feet.

The dumbbell, which must be approved by the judge, shall be made of one or more of the heavy hardwoods or of a rigid or semi-rigid, firm, nontoxic, non-wooden material, similar in size, shape, color and weight to a wooden dumbbell. Metal dumbbells are not permitted. Dumbbells shall not be hollowed out. It may be unfinished, coated with a clear finish or painted white. It shall have no decorations or attachments but may bear an inconspicuous mark for identification. The size of the dumbbell shall be proportionate to the size of the dog. The judge shall require the dumbbell to be thrown again before the dog is sent if, in his or her opinion, it is thrown less than 20 feet, too far to one side or too close to the ringside.

Retrieve over High Jump

In retrieving the dumbbell over the High Jump, the exercise is executed in the same manner as the Retrieve on the Flat, except that the dog must jump the High Jump both going and coming. The handler must stand at least 8 feet – or any reasonable distance beyond 8 feet – from the jump but must remain the same spot throughout the exercise. The handler must throw the dumbbell at least 8 feet beyond the jump. The High Jump must be jumped without touching it.

The minimum jump shall be a multiple of 2 inches set at the nearest jump height, which is determined by a measurement of ¾ of the height of the dog at the withers. No dog will jump less than 4 inches or more than 28 inches. Example: a 10-inch dog jumps 8 inches (for example, 10 inches x 0,75 =7.5 inches or 8 inch jump).

Height to be Jumped

¾ Jump - Measured height of dog at withers	Height to be jumped
Less than 10 inches	4 inches
10 inches to less than 12 ½ inches	8 inches
12 ½ inches to less than 15 inches	10 inches
15 inches to less than 17 ½ inches	12 inches
17 ½ inches to less than 20 inches	14 inches
20 inches to less than 23 inches	16 inches
23 inches to less than 25 ½ inches	18 inches
25 ½ inches to less than 28 inches	20 inches
28 inches to less than 31 inches	22 inches
31 inches to less than 33 ½ inches	24 inches
33 ½ inches to less than 36 inches	26 inches
36 inches to less than 39 inches	28 inches

The jumps may be preset by the stewards based on the handler's advice as to the dog's height. The judge must make certain that the jump is set at the required height for each dog, and shall verify, with an ordinary folding rule or steel tape to the nearest one-half inch, the height at the withers of each dog that jumps less than 36 inches. The decision should not be based on the height of the jump on the handler's advice.

The side posts of the High Jump shall be 4 feet high and the jump shall be 5 feet wide. It shall be constructed to provide adjustment for each 2 inches from 4 inches to 28 inches. It is suggested that the jump have a bottom board 8 inches wide, including the space from the bottom of the board to the ground or floor, plus three other 8-inch boards, one 4-inch board and one 2-inch board. A 6-inch board also may be provided. The jump shall be painted flat white. Only the width in inches shall be painted on both sides of each board in black 2-inch numbers. The number on the bottom board represents the distance from the ground or floor to the top of the board.

SUGGESTED CONSTRUCTION OF HIGH JUMP

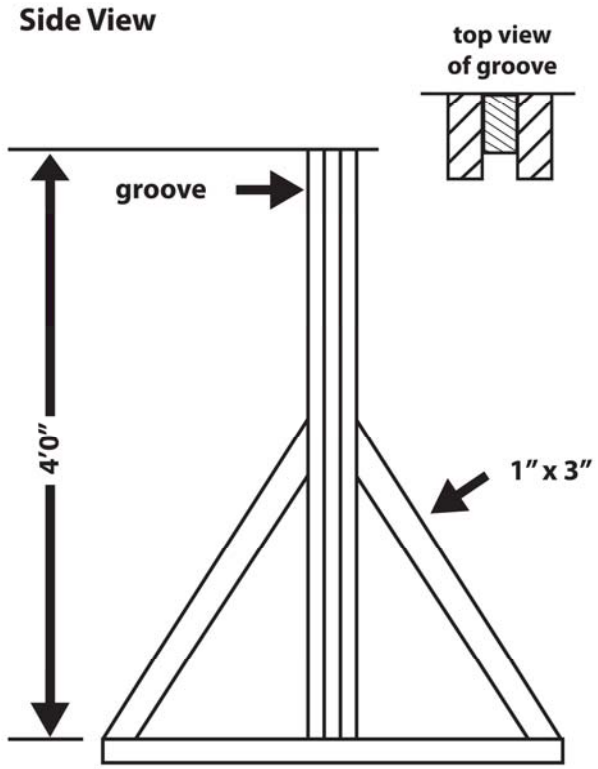

Front View

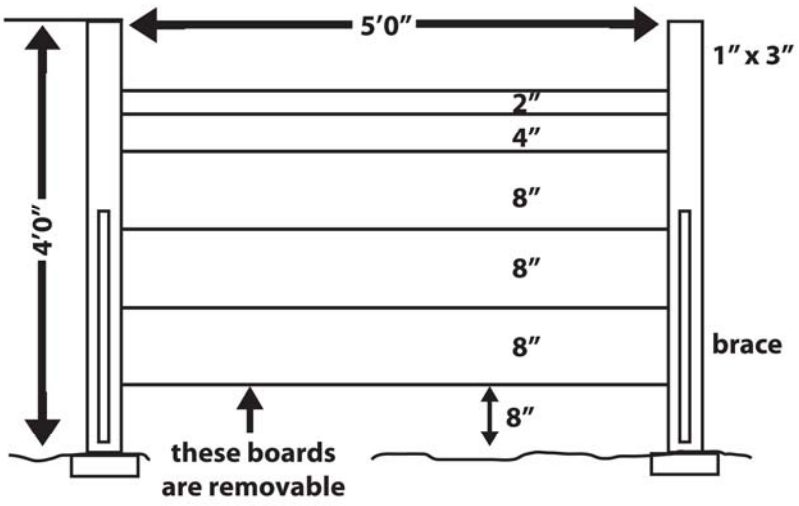

In the Broad Jump the handler will stand with the dog sitting in the heel position in front of and anywhere at least 8 feet from the jump. On order from the judge to, “Leave your dog,” the handler will give the dog the command and/or signal to stay and go to a position facing the right side of the jump, with toes about 2 feet from the jump, anywhere between the first and last hurdle. On order from the judge, the handler shall give the command or signal to jump. The dog should then clear the entire distance of the Broad Jump without touching and, without further command or signal, return to a sitting position immediately in front of the handler as in the Recall. The handler shall change position by midair but shall remain in the same spot. On order from the judge, the handler will give the command or signal to Heel and the dog shall finish as in the Recall.

The Broad Jump shall consist of four hurdles, built to telescope for convenience. It shall be made of boards about 8 inches wide, the largest measuring about 5 feet in length and 6 inches high at the highest point. All hurdles shall be painted white.

The hurdles shall be arranged by size, evenly spaced to cover a distance equal to twice the height of the High Jump as set for the particular dog, with the low side of each hurdle and the lowest hurdle nearest the dog. The four hurdles shall be used for a jump of 48 inches to 72 inches, three for a jump of 28 inches to 44 inches and two for a jump of 16 inches to 24 inches. The highest hurdles shall be removed first.

SUGGESTED CONSTRUCTION OF BROAD JUMP

End View of Four Hurdles

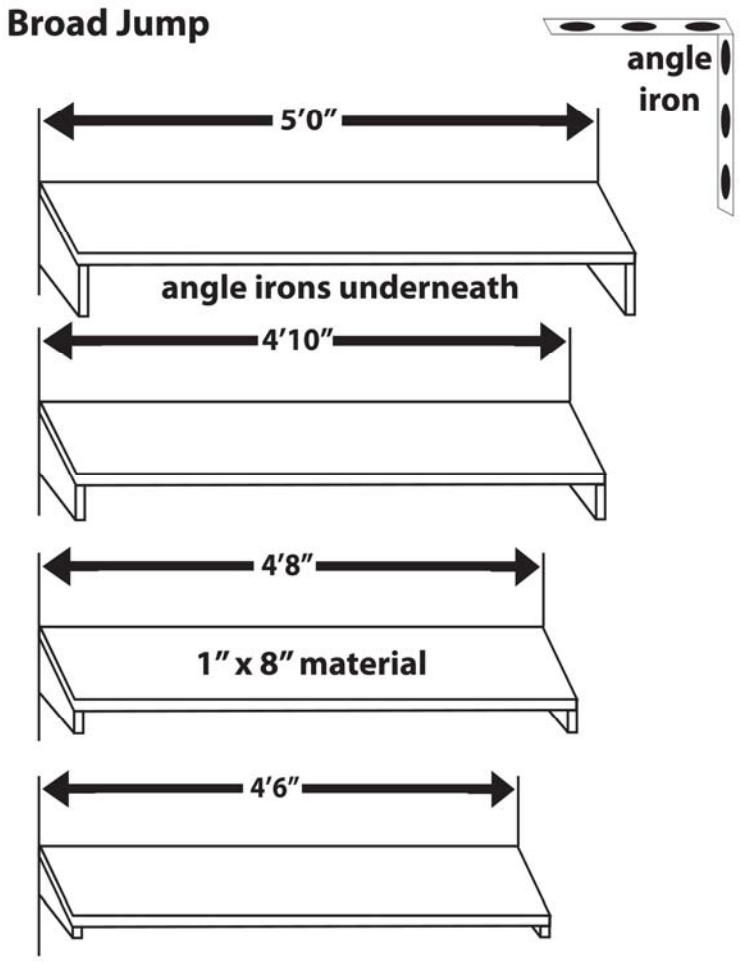

Graduate Open

Signal Exercise

The exercise and scoring is the same as the Utility Signal exercise except that leaving the dog will be from 10 to 20 feet and the handler may give the command and/or signal on the judge's order to stand and the judge's signals to stay, down, sit, come and finish.

Scent Discrimination

The exercise and scoring is the same as the Utility Scent Discrimination exercise except that only four articles (two leather, and two metal) and the handler and dog will remain facing the articles, ant only one will be retrieved. It is the handler's discretion as to which article is retrieved.

Directed Retrieve

The exercise and scoring is the same as the Utility Directed Retrieve except that no center glove is used.

Moving Stand and Examination

The exercise and scoring is the same as the Utility Moving Stand and Examination, except that the handler may pause or hesitate when giving the command and/or signal to stand.

Go Out

The principal features of this exercise are that the dog go away from the handler to the opposite end of the ring and stop as directed. The orders are: “Send your dog” and “Return to your dog.” The handler will stand in the approximate center of the ring between the jumps facing the unobstructed end of the ring. The judge will order “Send your dog,” and the handler will command and/or signal the dog to go forward at a brisk trot or gallop to a point about 20 feet past the jumps in the approximate center of the ring. When the dog reaches this point, the handler will give a command to sit. The dog must stop and sit with its attention on the handler, but it need not sit squarely. The judge will then order the handler, “Return to your dog,” and the handler will return to the heel position.

Directed Jumping.

The principal features of this exercise are that the dog stay where left, jump as directed, and return to the handler as in the Novice Recall. The orders are: “Leave your dog,” “Bar,” “High” and “Finish.” The handler will stand with the dog sitting in the heel position at the unobstructed end and in the center of the ring. The judge will order “Leave your dog,” and the handler will command and/or signal the dog to stay, then walk to the far end of the ring and turn to face the dog. The judge will order either “Bar” or “High” for the jump, and the handler will command and/or signal the dog to return to the handler over that designated jump. While the dog is in midair, the handler may turn to face the dog as it returns. The dog will sit in front of the handler, and, on order from the judge, finish as in the Novice Recall. The dog will be sent over only one jump, and the same jump will be used for all dogs as designated by the judge at the start of the class.

Utility

Signal Exercise

The principal features of this exercise are the ability of dog and handler to work as a team while heeling, and the dog’s correct responses to the signals to Stand, Stay, Drop, Sit and Come.

Orders are the same as in Heel on Leash and Figure 8, with the additions of “Stand your dog,” which shall be given only when dog and handler are walking at normal pace, and “Leave your dog.” The judge must use signals for directing the handler to signal the dog to Drop, Sit and Come, in that sequence, and to Finish.

Heeling in this exercise shall be done in the same manner as in Heel Free, except that throughout the entire exercise the handler shall use signals only and must not speak to the dog at any time. When the judge orders “Forward,” the handler may signal the dog to walk at heel, and on separate and specific orders from the judge, shall execute a “Left Turn,” “Right Turn,” “About Turn,” “Halt,” “Slow,” “Normal” and “Fast.” These orders may be given in any sequence and may be repeated as necessary, but the judge shall attempt to standardize the heeling pattern for all dogs in the class.

On order from the judge while the dog is walking at heel, the handler shall signal the dog to Stand in the Heel position near one end of the ring. On further order “Leave your dog,” the handler shall signal the dog to Stay, go to the other side of the ring and turn to face the dog. On separate and specific signals from the judge, the handler shall give the signal to Drop, Sit, Come and Finish as in the Novice Recall. During the heeling part of this exercise, the handler may not give any signal, except when a command or signal is permitted in the heeling exercises.

Scent Discrimination

In each of these two exercises (using metal and leather-covered articles), the dog must select by scent alone and retrieve an article which has been provided and handled by its handler. These shall consist of two sets, each containing five identical articles not more than 6 inches in length. These may be items of everyday use. One set shall be made entirely of rigid metal and one of leather of such design that nothing but leather is visible except for the minimum amount of thread or metal necessary to hold the article together. The articles in each set must be legibly numbered, each with a different number, and must be approved by the judge.

The handler shall present all 10 articles to the judge. The judge shall designate one article from each of the two sets and shall make a written note of the numbers of the two articles to be selected. These two articles shall be placed on a table or chair in the ring until picked up by the handler who shall hold only one article at a time. The handler's scent may be imparted to the article only from the hands, which must remain in plain sight. The handler can select which article is picked up first.

Before the start of the Scent Discrimination exercises, the judge or the steward will handle each of the remaining eight articles, placing them at random in the ring about 6 inches apart. The handler will stand about 15 feet from the articles with the dog sitting in the heel position. On order from the judge, the handler will immediately place the selected article on the judge's book or work sheet and the judge, without touching the article, will place it among other articles. The handler and dog will face away from the time the judge takes the handler's articles until the order "Send your dog" is given.

When the judge gives the order "Send your dog," the handler and dog will execute a Right About Turn to face the articles and the handler will simultaneously give the command or signal to retrieve. The dog shall not again sit after turning but go directly to the articles. The handler may given his or her scent to the dog by gently touching the dog's nose with the palm of one open hand, but this may only be done while the dog is sitting at heel and the arm and hand must be returned to a natural position before handler and dog turn to face the articles. The dog shall go at a brisk pace to the articles. The dog may take any reasonable time to select the right article provided it works continuously. After picking up the right article, the dog shall return at a brisk pace and complete the exercise as in the Retrieve on the Flat. The same procedure is followed in both Scent Discrimination exercises. If a dog retrieves a wrong article in the first exercise, it shall be placed on the table or chair, and the handler's article also must be taken from the remaining articles. The second exercise shall then be completed with one less article in the ring,

Directed Retrieve

The Directed Retrieve exercise has three principal features: 1) the dog must stay until directed to retrieve; 2) following a command, the dog must go directly to the designated glove; and 3) the dog should retrieve promptly. The orders for the exercise are "One," "Two" or "Three," followed by "Take it' and "Finish." In this exercise, the handler will provide three predominantly white, cotton work gloves, which must be open and approved by the judge. The handler will stand with his or her back to the unobstructed end of the ring with the dog sitting in the Heel position midway between and in line with the two jumps. The judge or steward will then drop the three gloves across the end of the ring, one glove in each corner and one in the center, about 3 feet from the side of the ring, while the handler and dog are facing the opposite direction. All three gloves should be clearly visible to the dog and handler when the team turns to face the glove designated by the judge. There shall be no table or chair at this end of the ring.

The gloves shall be designated "One," "Two" and "three," reading from left to right when the handler turns and faces the gloves. The judge will give the order 'One" or "Two" or "Three." The handler then must give the command to Heel and turn in place, right or left, to face the designated glove. The

handler will come to a halt with the dog sitting in the Heel position. The handler will then give the dog the direction to the designated glove with a single motion of the left hand and arm along the right side of the dog and will give the command to retrieve either simultaneously with or immediately following giving the direction. The dog shall then go directly to the glove at a brisk pace and retrieve it without unnecessary mouthing or playing with it, completing the exercise as in the Retrieve on the Flat.

The handler may bend his or her knees and body in giving the direction to the dog, after which the handler will stand erect in a natural position with arms at his or her sides.

The exercise shall consist of a single retrieve, but the judge shall designate different glove numbers for successive dogs.

Moving Stand and Examination

The principle features of the exercise are that the dog heel, stand and stay on command by the moving handler, accept the examination without shyness or resentment and, on command, return to the handler.

The first two orders for the exercise, “Forward” and “Stand your Dog,” are to be given while the handler is walking, followed by “Call your dog to heel.”

The handler stands with his dog sitting in the heel position at a point indicated by the judge. The judge asks, “Are you ready?” and orders “Forward.” The handler commands or signals his or her dog to heel and walks briskly at a normal pace. After the handler has proceeded about 10 feet, the judge orders, “Stand your dog.” The handler will, without pausing, command and/or signal the dog to stand, continue forward 10 to 12 feet and turn around, either to the right or left, and stand facing the dog. The dog must stand and stay in position.

The judge will then approach the dog from the front and examine the dog by going over it with his/her hands. The examination shall not include the dog’s mouth or testicles.

Following the examination, the judge will order, “Call your dog to heel.” The handler should then command and/or signal the dog to return to heel position. The dog should immediately return in a brisk manner to the proper heel position beside the handler.

Go Out

The principal features of this exercise are that the dog goes away from the handler to the opposite end of the ring and stop as directed. The orders are: “Send your dog” and “Return to your dog.” The handler will stand in the approximate center of the ring between the jumps facing the unobstructed end of the ring. The judge will order “Send your dog,” and the handler will command and/or signal the dog to go forward at a brisk trot or gallop to a point about 20 feet past the jumps in the approximate center of the ring. When the dog reaches this point, the handler will give a command to sit. The dog must stop and sit with its attention on the handler, but it need not sit squarely. The judge will then order the handler, “Return to your dog,” and the handler will return to the heel position.

Directed Jumping

The principle features of this exercise are as follows: the dog goes away from the handler in the direction indicated, stops, jumps as directed and returns as in the Recall.

The orders are “Send your dog,” the designation of the jump to be taken and “Finish.”

The jumps shall be placed midway in the ring at right angles to the sides of the ring, 18 to 20 feet apart, the Bar Jump on one side, the High Jump on the other. The judge must make certain the jumps are set at the required height for each dog by following the procedure described in Retrieve over the High Jump.

The handler, from a position on the ring's center line and about 20 feet from the line of the jumps, shall stand with the dog sitting in the Heel position and, on order from the judge, shall command and/or signal the dog to go forward at a brisk pace to a point about 20 feet beyond the jumps and the approximate center.

When the dog has reached this point, the handler shall give a command to Sit. The dog must stop and sit with attention on the handler but does not need to sit squarely.

The judge will designate which jump is to be taken first by the dog, and the handler shall command and/or signal the dog to return over the designated jump. While the dog is in midair the handler may turn to face the dog as it returns. The dog shall sit in front of the handler and, on order from the judge, finish as in the Recall. The judge will say, "Exercise finished" after the dog has returned to the Heel position.

When the dog is again sitting in the Heel position, the judge shall ask, "Are you ready?" before giving the order to send the dog for the second part of the exercise. The same procedure shall be followed for the second jump.

The judge may decide which jump is taken first, but both jumps must be taken to complete the exercise. The judge must not designate the jump until the dog is at the far end of the ring. The dog shall clear the jumps without touching them.

The height of the jumps shall be the same as required in the open classes. The High Jump shall be the same as that used in the open classes, and the Bar Jump shall consist of a bar between 2 and 2-1/2 inches square with four edges rounded sufficiently to remove sharpness. The bar shall be painted a flat black and white in alternate sections of about 3 inches each. The bar shall be adjustable for each 2 inches of height from 8 inches to 36 inches. The jump shall be constructed and positioned so the bar can be knocked off without disturbing the uprights.

SUGGESTED CONSTRUCITON OF BAR JUMP

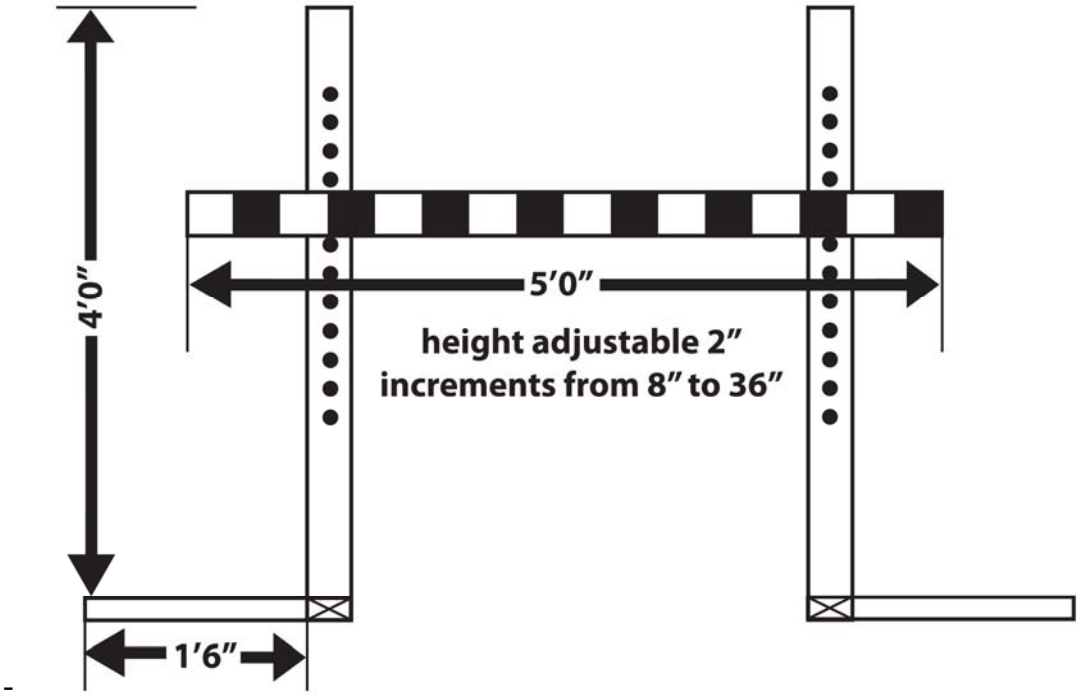

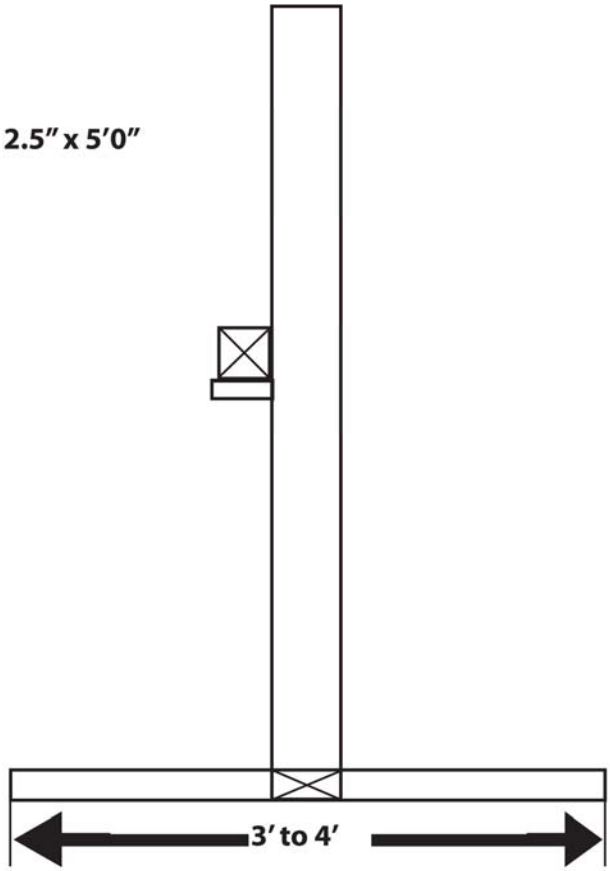

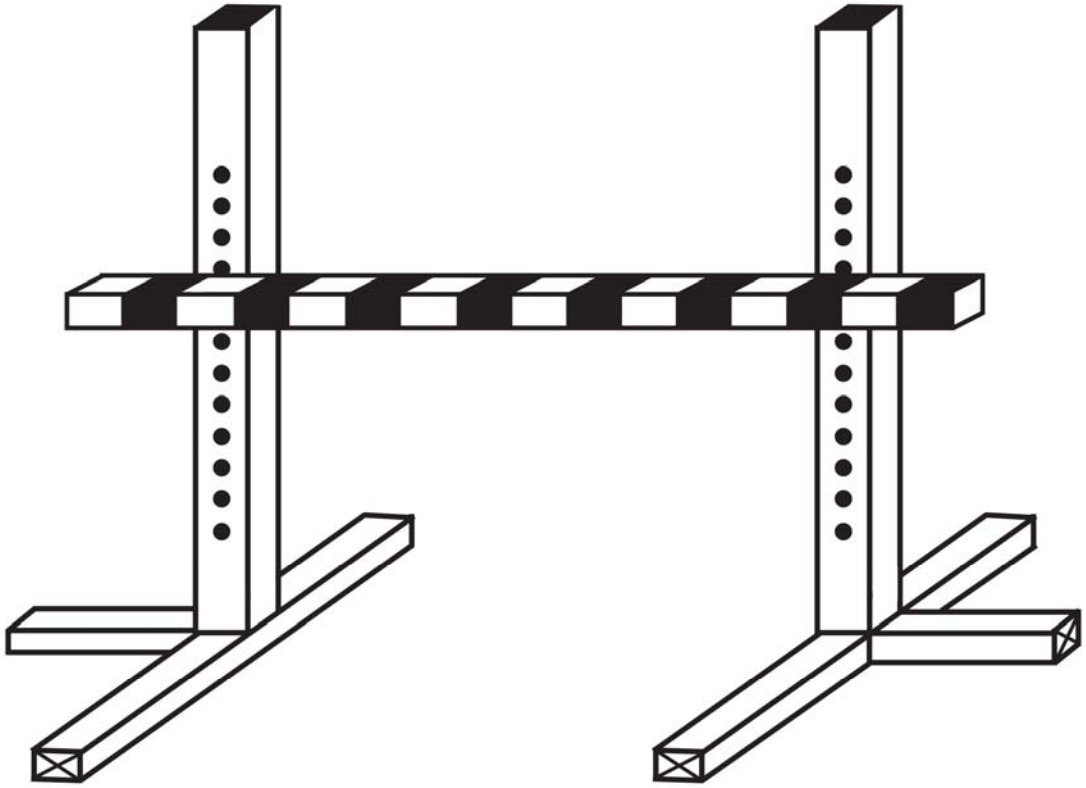

AGILITY

4-H Dog Agility is designed to be fun for both handlers and dogs. It gives a nice break from the more structured obedience and showmanship competitions, yet still requires a well-trained dog and informed handler.

WHAT IS DOG AGILITY? Agility is basically a timed obstacle course of 6 to 20 obstacles (depending on the class). Scoring is done by making deductions for faults such as jumping off an obstacle, running the wrong course, a tight leash or taking too much time to run the course (See the scoring section). Dogs can work on either left or right side of the handler and do not need to be in Heel position; in fact, ideally a dog should be able to work well on both the left and right and to go ahead of the handler on the handler's command (such as go-out). The most important element of agility is fun – the dogs and handlers have fun, yet they must work well as a team.

THE OBSTACLES: The basic obstacles for the beginning agility course consist of jumps, tunnels, a dog walk and a pause box. The guidelines for construction of the obstacles are meant to be broad enough to enable even the smallest 4-H club to construct a course. An open tunnel may be anything from a child's purchased tunnel to a cardboard box with electric fence posts to secure it. The only requirements are that the obstacle meets the size requirements and that it is safe and fair for the smallest dog to the largest. Refer to the equipment permitted in each level of competition. There is a progression of equipment up through the higher levels. As well as a progression from onleash to off leash agility.

GENERAL RULES:

Youth need to have completed basic obedience training instruction and at least one red ribbon in beginning obedience, titles in other dog show venues, or equivalent experience in order to participate in agility. Participants wishing to enter agility must demonstrate basic skills equivalent to beginning obedience training and thus can enter agility.
Also exhibitors need to attend club meetings, training clinics, or other hands on experiences with agility instruction and equipment. If a youth has not practiced on agility equipment, they may not enter a competition. Exhibitors must have demonstrated a minimum level of proficiency for safety and training experience for agility classes (loose leash beside handler, heel, sit, stay, come, down, etc….) Leaders can help guide youth into appropriate agility classes.

A dog may enter in only one level of agility in a competition (Level 1,2,3,4, or 5). An exhibitor may enter multiple dogs according to show guidelines. A show may have additional classes within in a level (see information on additional agility classes from the 4-H web page or other agility organizations – jumpers, colors, etc…) as time or location permits.

Wither heights of all agility dogs must be included with advanced entries. This is necessary to draft show order. Wither height measurements may be verified as part of the on-site registration process.

Baiting with food, squeakers, or toys will not be permitted in any class and is cause for disqualification.

Exhibitors should wear tennis shoes or shoes with non-skid soles.

Dog only goes over the jump. The handler runs beside the obstacle. Handler does not go over the jump.

COLLARS - All dogs must wear a flat / buckle collar. No other type is allowed. Each dog may be exhibited by only one handler in agility competition. No hanging tags.

DOG AGE - Dogs must be 18 months old or older to participate in competition. Practice may occur earlier (with veterinarian recommendations) with low elements and no excessive jumping. Mature body structure is needed for jumping and higher obstacles for all sizes of dogs.

Agility is an athletic activity. Dogs need to be in condition and in good health to be able to participate in this discipline. Excessive weight or under weight can be detrimental to a dogs health. Judges or judges and superintendents may confer and may excuse lame dogs or carrying excessive weight and that are unfit for competition.

Host sites will send a list of equipment to the judge and the judge will determine the course map. Course maps will be made available and posted at time of show registration in designated area(s).

Obstacle equipment needing repair or deemed unsafe by judge will be excluded from the competition. Advanced pieces of equipment will be eliminated from a lower level class.

Obstacles should be numbered to note the obstacle order for the course.

The course may be measured using a surveyor wheel or tape measure. The judge will measure the course and set the course time (except for the preset course used in Level 1).

Course time: Need to measure and yardage to determine course time. As each course may be different depending on layout and number of obstacles.

All obstacles are spaced a minimum of 10 feet apart, however the optimum spacing is 15 feet to 18 feet apart.

Leash Usage in Agility - Level 1 & 2 Agility classes is run on leash. Level 3, 4, and 5 are all run off leash. Level 3, 4, and 5 must be run off leash and will not be able to take a lower ribbon placing to run on leash. A 4-foot to 6-foot leash is used for Level 1 and Level 2 during competition. A leash will also be used for dogs entering the show ring for Level 3, 4, and 5. Exhibitors will take leash off of dog prior to starting their run. Exhibitors will attach leash to dog collar following their run and before exiting the show ring.

Judges Briefing – Judges are available at the beginning of the walk through to go over any instructions, provide explanation, and to answer questions.

Course Walk Through - Exhibitors will be able to go through the course during walk through time multiple times without their dog (handlers only). The course will close prior to competition and handlers in Level 1, 2, and 3, may go through the actual obstacles one time with their dog on leash (one team at a time). Level 4 and 5 may also walk through the course during their walk through time multiple times without their dog (handlers only).

Obstacle Count - One of each obstacle noted in each level are mandatory and duplicate obstacles may be added to make up quantities of obstacles in each level. Level 5 – youth can use additional equipment for competition that they have access to and can use in practice. Obstacles that are used for agility competition events may be included from AKC, CPE, USDAA, NADAC, and UKC., etc….)

Scoring - All clean runs will place at the top of the class using run times to designate the top placings. Following the clean runs, the exhibitors who have had penalties will be placed. Clean runs without any penalties or refusals will be placed at the first of each class.

Bar Knock Down - A knocked down bar will be minus 5 points. This is a standard deduction for knocked down jump, bar knocked down or a standard knocked over.

Agility Jump heights – measure dogs at withers to determine jump height:

Dogs 11 inches or less – jump 4 inches,
Dogs over 11 inches up to and including 14 inches – jump 8 inches,
Dogs over 14 inches up to and including 18 inches – jump 12 inches,
Dogs over 18 inches – jump 16 inches.

AGILITY CLASSES

Level 1 - 6 obstacles – 3 bar jumps which have two bars each, short dog walk, pause box or table, and tunnel (open). **Level 1** is run on leash and obstacles are arranged in one set course pattern (see diagrams). Judge may request exhibitors to run the course to be run clockwise or counter clockwise for the event. The same bar jump is used for the start/finish when running the course either direction. Use 45 seconds for course time with 6 obstacles. Youth learn safety on obstacle approach and completion on loose leash

Level 2 – 10 obstacles – several bar jumps which have two bars each, short dog walk, pause box or table, tunnel (open), chute (collapsed or closed tunnel), solid panel jump and tire jump (hoop jump). **Level 2** is run on leash and obstacles change location in different order. For Level 2, some new obstacles were added and youth learn safety on some new obstacles on loose leash and to complete obstacles in different course order. Youth help arrange obstacles to make up different courses during practices or fun matches. Use 60 seconds for course time with 10 obstacles. For competition, judge may design a course or use from a few samples on the web – 4 – 6 samples. Can use keyhole so same jumps may be used more than once and not have to purchase as many jumps. Solid jump added in this class – can use fabric between PVC pipe. Sleeve fabric of 6 inch panels. Jump should have a displaceable bar (break away) so it can knock down from bar cup so that it will fall down if it is knocked.
Not recommended to use Open Obedience jump as it may be too solid and scare a dog if it is knocked down.

Level 3 - 10 obstacles – same obstacles as Level 2 but dogs run off leash for Level 3.Youth learn off leash techniques. Youth help arrange obstacles for practice or fun matches to make up different courses. Use 60 seconds for course time with 10 obstacles

Note: Level 2 & 3 courses can be designed the same at competitions, with Level 2 exhibitors running on leash and Level 3 off leash.

Level 4 - 13 obstacles – bar jump which has one bar each, bar jump which has two bars each, tall dog walk, pause box or table, tunnel (open), chute (collapsed or closed tunnel), solid panel jump, teeter totter (seesaw), weave poles (single set with 6 poles), and tire jump (hoop jump). **Level 4** is run off leash and some new obstacles are added. Youth learn how to handle dog through obstacles with more fluidity while on course. Youth learn safety on some new obstacles while off leash and to complete obstacles in different course order. Youth help arrange obstacles to make up different courses. Use 75 seconds for course time.

Level 5 - 15 – 20 of any of the following obstacles such as: bar jump which has one bar each, bar jump which has two bars each, tall dog walk, pause box or table, tunnel (open), chute (collapsed or closed tunnel), solid panel jump, A-frame short, A-frame tall, teeter totter (seesaw), weave poles (single set with 6 poles), weave poles (double set with 12 poles),and tire jump (hoop jump) broad jump, dump jump, triple bar jump, swing bridge, crawl, etc…. . Number of obstacles used for a course will depend on ring size and available equipment at show site. Course layout may include more advanced handling techniques. Youth learn safety on some new obstacles while off leash and to complete obstacles in different course order. Youth help arrange obstacles to make up different courses. Youth learn more difficult/higher skilled handling techniques – (such as rear cross, front cross, side changes, jumps – multiple or send outs, distance handling, obstacle omission – two

obstacles close in proximity and dog takes the obstacle as directed by handler (tunnel by dog walk) – or dummy jump which is an extra obstacle in the ring but not utilized for the course, or addition of optional obstacles.

Level 5 – off leash and can use equipment that youth can practice with, borrow, and use for agility competition events. (such as: AKC, CPE, USDAA, NADAC, UKC, etc..) Groups may add some new obstacles not listed on the Agility Equipment Grid, which must be safe and can be from other organizations hosting agility activities as mentioned above. An A-Frame is acceptable as long as youth have opportunity to practice obstacle. Note: It will not be added at state fair until more dogs can practice and have experience with it.

Pause Table - Level 5 table heights (if use obstacle)

- Dogs over 18 inches – use table 16 inches high
- All other dogs use 8 inch table

Other possible Agility Course Types –

- o jumper courses – jumps are used as primary obstacles – maybe add a tunnel, weave poles, etc… (no contact obstacles)
- o team – two handlers with two dogs or three handlers with three dogs are each responsible for completing a portion of a standard dog agility course. A baton is passed, like a human relay race.
- o Many other options - - different agility organizations have different course guidelines and some are very creative and add more fun (colors, wildcard, basketball, etc….)

RIBBON PLACINGS:

Purple	**85-100 points**
Blue	**70-84 points**
Red	**55-69 points**
White	**54 and less**

Agility numbers are needed to number the obstacle order on how to run the course sequence – need for Level 2, 3, 4,5, as it may be done other than in a circle. Sample photos will be posted on the web.

-can use camp stakes with numbers attached if using on dirt or grass
- 6 inch PVC pipe with slice marks – use laminated numbers
- cones – numbered
- wooden block base with numbers fitting in the slots
- bricks – with numbers on them

All Agility equipment should follow the guidelines in 4-H 420. This is necessary so that the equipment used is safe for use for the dogs and youth. This equipment will be used at state fair.

Obstacles

Contact Areas – obstacles that have contact areas (such as teeter totter, dog walk – short and tall, and A-Frame) should have tape, painted line, or painted ends to mark the designated contact area which at least one dog foot must touch. A variety of methods may be used as long as the contact areas are clearly marked.

Low/Short Dog Walk: A 8 or 12-foot plank, 12 inches wide is used for beginners. It should have contact zones painted 42 inches on each end and placed on cement blocks or

something similar to make a safe and secure obstacle. For the Intermediate and Advanced classes, it should consist of the dog walk on plank and two ramp planks each measuring 12 feet in length and 12 inches wide, or 8 feet each by 12 inches wide. The cross plank should be elevated to no more than 36 inches above the ground by two rigid supports on each end of the plank, to which the cross plank and ramp planks shall be securely fastened. Contact zones should be painted 42 inches up the ramp planks. Both dog walks may have anti-slip slats fastened at about 12-inch intervals on the angled boards. The surfaces on all top surfaces of the boards should be roughened to provide better traction but should not be hazardous to dogs' feet.

Low Dog Walk – 8 or 12 foot plank, 12 inches wide placed securely on cement blocks.
12 ft. angle – 12 ft. top – 12 ft. angle – with 42 inch contact areas on each end
8 ft. angle – 8 ft. top – 8 ft. angle – with 42 inch contact areas on each end

High/Tall Dog Walk – 36 inches high with the following board lengths – (angle – top – angle) The standard height is 36 inches. The contact areas are 42 inches on both ends for the low and high walks. Sand on all boards. Slats on ramps (angled boards) for the high walks only. Low and high dog walks may have slats and sand (both) on the dog walks. But low doesn't need them.

A-Frame – (Level 5 optional) no more than 36 inches high with two 6 – 8 ft. boards that are 3 -4 foot wide. It should have adjustable chains that will allow it to be set at lower height for dogs learning the obstacle and for practice. 6 ft. boards – 36 inch contacts 8 ft. boards – 42 inch contacts

Dogs do not need to touch contact area on the up contact but do need to touch contact area on down side. The total height of A frame should be 36 inches tall during practice or competition. Chains will be let down for this height. A-Frame can have slats and sand (both).

Teeter/Seesaw: no slats on the board, just use sand for traction. Techniques for adding the sand is to mix it into the paint, or use an adhesive and sprinkle the sand on the wet adhesive. Must dry completely after being brushed on. The top surface of the plank must be non-slick. Glossy paints are not allowed and no slats are allowed. No slats on the board, just use sand for traction.

Teeters should have these dimensions for consistent angle:
12 ft. board – 24 inch height at the center – 42 inch contact areas on each end
10 ft. board – 20 inch height at the center – 42 inch contact areas on each end
8 ft. board – 16 inch height at the center – 36 inch contact areas on each end

Pause Box/Pause Table: Pause Box - Four-foot square which is between 4 inches to 6 inches high, made from 2x4 lumber, PVC pipes, rope tied around stakes or other material to fit dimensions can be used for a pause box. The dog must step or jump into the box and to a sit stay or down stay as the judge counts off 5 seconds aloud. The sides are 4 – 6 inches tall. The sides may be raised or on legs so that it is raised 4 -6 inches in height. Dog steps over side to get into box. A pause box does not need a solid bottom, it may be constructed like a frame and set flat on the ground. **Pause Table** – either laid flat on ground or use the shortest legs that are 4- 6 inches high. Either pause box or pause table may be used and may be switched for other levels of competition according to equipment available for host site. Judge designates if exhibitor should sit (beginning levels 1 & 2) and more advanced could be a sit or down. Must stay in position for 5 – and - 4- and 3- and 2- and 1 – Go. If a dog leaves the table or box before the count of 5 is completed they must get back into position and the count starts over. No points are lost if a dog breaks, the count of 5 restarts. If a dog leaves the

box/table it is a 5 point deduction and the count of 5 restarts. If a dog over runs the box/table it is a 5 point deduction and the count of 5 restarts.

Open Tunnel: An open tunnel may consist of a child's toy play tunnel, cardboard boxes, fabric over a frame, etc.; should be between 10 feet to 20 feet long with a 24-inch diameter opening, and should be fully enclosed except for openings on each end.

24 inches in diameter or a box may be used. Sandbag or stake down the tunnel. A variety of items may be used (milk jugs with water, and bungee cords, etc…) to hold the tunnel in place while dogs go through.

Closed Tunnel/ Chute:

A closed tunnel or chute consists of two parts – the rigid opening and the tunnel chute. The rigid opening should be made of rigid construction that can be anchored or weighted to the ground. The rigid opening should be 24 inches to 36 inches long and about 24 inches in diameter . Suggestions for this part of the tunnel could include rigid barrels on a frame to keep from rolling or a dog house-type structure to which the chute is attached. The tunnel chute should be made of a lightweight but strong fabric such as an old sheet. .The chute should be 6 feet to 6 feet 6 inches long measured with the chute fabric attached to the barrel and the measurement should be taken from the bottom edge of the exit end of the barrel (with the fabric lying on the ground) to the exit end of the chute fabric.

Weave Poles: Each pole for weaving is 1 to 1 ¼ inches in diameter and 20 – 48 inches high, set in the ground using either stakes or electric fence posts, or a base no more than 1 inch high and 4 inches wide. The poles are set 20 - 24 inches apart. Six weave poles are used in the lower levels, but for Level 5 a set of 12 may be used.

Jumps: High jumps, bar jumps, brush jumps and similar hurdles should be of sturdy construction with planks, rails, bars or poles no less than 48 inches or more than 62 inches in length. The side standards should be constructed so as not to topple if bumped by a dog while running. The height shall be adjustable to 6 inches, 12 inches and 18 inches.

Hoop Jump: The hoop jump shall be a frame that holds a hula hoop, tire, clothes dryer hose, etc., and is adjustable to 6 inches, 12 inches and 16 inches in height.

Tire Jump: The height of the tire jump adjusts to the same height as the jump height. The interior diameter of the tire must be at least 24 inches in diameter.

SCORING IN AGILITY

- Exhibitors need to try an obstacle 3 times and then move on to next obstacle.
- If youth skips an obstacle or refuses 3 times is minus 20 points (per obstacle) as they did not complete the obstacle.
- Need to successfully complete all obstacles for a purple ribbon.
    - Refusal one time is minus 5 points (they did it on second try)
    - Refusal two times is minus 10 points (they did it on third try)
    - Refusal three times is minus 20 points (they did not complete the obstacle and went on to next obstacle)

- Need to complete all obstacles for a purple.
- Top run is clean without any refusals and completes all obstacles and must get an 85 or higher for a purple.
- Lose a point for every second over course time

Maximum Agility score is 100 points

Course Times:
Measurement done with tape measure or surveyor's wheel and determine course time according to distance and number of obstacles in each class.

Course Time Deductions:
1 point for every second over the course time.

Refusing: When a dog puts two feet on an obstacle it is considered committed. A refusal occurs if a dog fails to continue the obstacle. When the dog stops forward motion a refusal deduction is scored. Also, if the dog runs past an obstacle or turns back on his path, a refusal is scored. Refusals are scored as 5 point deductions.

In/Out of the Pause Box:
No points are deducted but the count of 5 is restarted each time this happens. The time also will restart if a dog anticipates the count and gets up during the count. The count of 5 is restarted each time this happens.

Wrong Course:
Taking an obstacle out of sequence is a 5 point deduction per occurrence. Dog is eliminated after 3 occurrences.

Tight Leash or Leash Corrections:
-5 Handler or dog knocking down an obstacle or jump
-5 Missing a contact zone (one foot must touch zone)
-5 Handler running wrong course
-5 Handler touching dog or obstacle
-10 Seesaw fly offs

Dog Leaves Course – The timer should continue timing with the stopwatch (do not stop time) while the handler encourages the dog to return to the course. The handler will receive the ribbon they earn as the time lost will reflect on the ribbon placement. If the dog does not return to the ring then there is no possible score as the course was not completed and will be awarded a white ribbon. If the dog leaves the ring and is difficult to catch, the judge should wait no more than 5 minutes.

DESIGNING A COURSE
Obstacles must be clearly numbered.
There should be a minimum of 10 feet between obstacles but 15 feet to 18 feet is preferred.
The course should be smooth, not choppy or sharp.
Don't begin or end the course with contact obstacles or weave poles.
Avoid two contact obstacles in a row.
Put the Pause Box/Table near the mid point of the course.
Place start and finish lines 5 feet to 8 feet from the first and last obstacles.

Don't create handler restrictions – the handler should be able to work from either side of the obstacle.
Design the course using graph paper.
Design the course so it's easy for the judge to see all obstacles and contacts with minimum movement.
Start and Finish may use the same jump for the same "line" . Start and Finish lines should be easily seen by the timekeeper.
Judges should be aware of any holes, bumps, trees, poles, etc., that would possibly be hazardous.

Level 1 – Course may be run either direction (clockwise or counter clockwise) Agility numbers are needed to number the obstacle order on how to run the course sequence clockwise or counter clockwise.

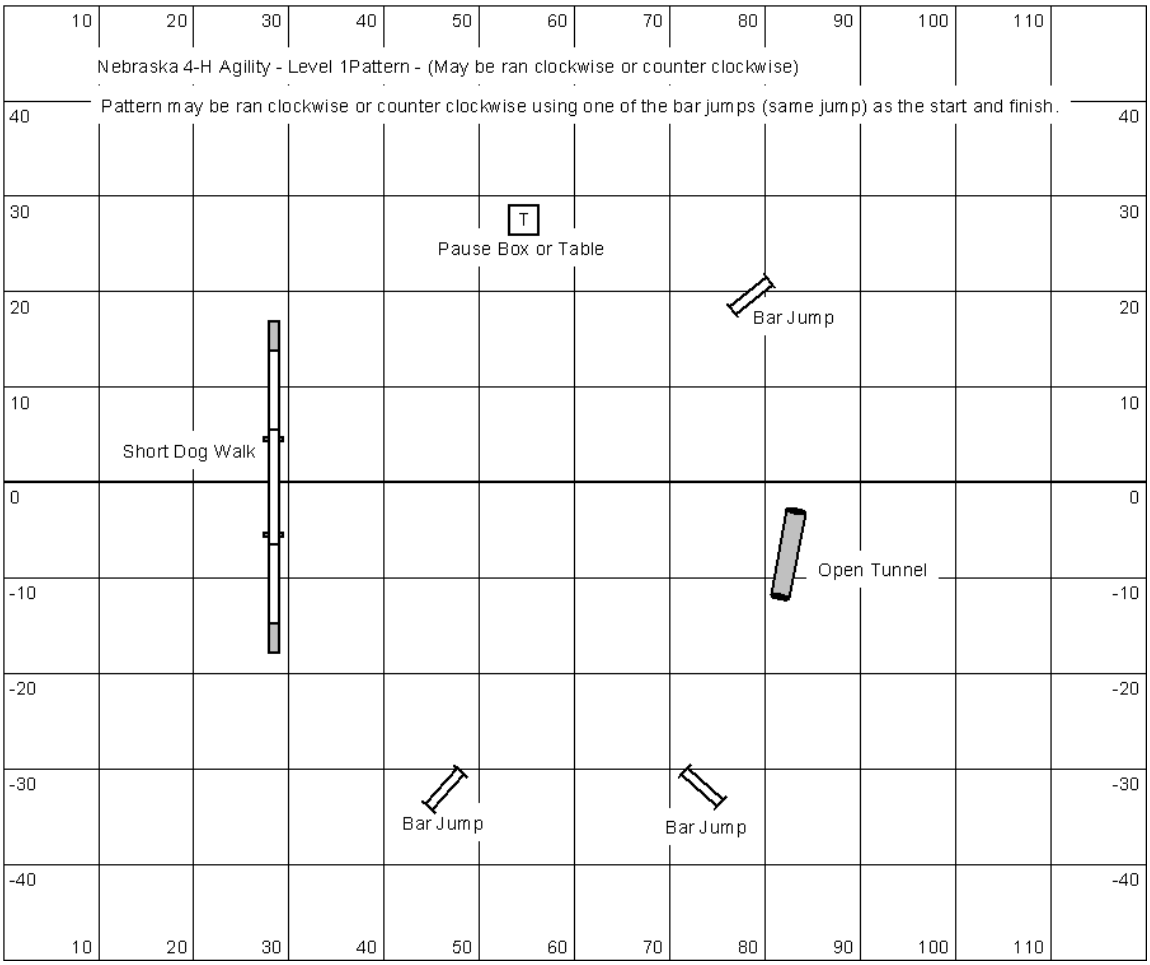

GLOSSARY OF TERMS

Brisk, briskly – keen, alive, alert, energetic.

Command – verbal order from handler to dog.

Crooked – a dog that is not straight in line with the direction the handler is facing.

Crowding – dog so close to handler as to interfere with handler's freedom of motion.

Directly – immediately, without deviation or hesitation.

Drop completely – a down position that would be acceptable for a long down exercise.

Gently – with kindness, without harshness or roughness.

Guiding gently by the collar – control of dog, by holding any part of the collar, with minimal pressure on the dog's neck.

Lame – irregularity or impairment of the function of locomotion, irrespective of the cause or how slight or severe.

Mouthing – when a dog chews or rolls the dumbbell in its mouth.

Natural – not artificial; free of fraud, and customarily expected in the home or public places.

Order – direction from judge to handler, either verbal or nonverbal.

Prompt response – without hesitation, immediate, quick.

Resentment – resistance, unwillingness.

Signal – nonverbal direction from the handler to dog.

Turn in place – turning in the area that is occupied by the handler before the turn has started.

Withers – highest point of the dog's shoulders.

OTHER DISCIPLINES / EVENTS

Groups or counties may add disciplines where there is an interest and ability. Some examples include:

RALLY

Rally obedience is a dog sport based on obedience. It was originally from the obedience practice of "doodling" - doing a variety of interesting warm up and freestyle exercises. Many of the Rally exercises are the same as, or have the same parts (elements) of traditional obedience.

Rally Obedience is a dog performance class that uses directional signs that are numbered to indicate the course the handler to follow during the performance. The team of dog and handler heel from sign to sign, and perform the exercises indicated by the numbered sign at each location. At the start sign, the judge gives permission to start the course and then the dog and handler go through the course. The judge will say "Are you ready?" followed by "Forward." No other directives are given. The course consists of signs that instruct the team what to do. Unlike traditional obedience, handlers are allowed to encourage their dogs during the course. There are 4 classes and the number of stations/signs is noted below (start and finish signs are not included in the sign count and are automatically used). Signs may be duplicated and used more than one time to create the course.

►**Beginning Rally** – dog is on leash and there are 5 to 10 stations. These beginning Rally signs are suggested – halt sit, halt down dog, right turn, left turn, about turn right, slow pace, fast pace, and normal pace. These are the same commands that exhibitors use in beginning novice obedience levels.

►**Rally 1** - dog is on leash and there are 10 to 15 stations.

►**Rally 2** - dog is off leash and there are 12 – 17 stations.

►**Rally 3** - dog is off leash and there are 15 to 20 stations.

Although every course will have many of the same exercises, the sequence of those exercises in the course design may vary. Youth in 4-H Clubs may design courses and practice them at their 4-H club meetings, fun matches, and local dog shows.

The signs and holders should be 8 ½ x 11 inches up to 11 x 17. The designated wording and symbols must be used. Signs can be purchased or there are files on the internet that can be downloaded.

The numbers (cones, bricks, etc…) used for Agility may also be used to designate the course order for Rally Obedience courses.

Additional Classes / disciplines for Youth and Dogs – Interested counties, clubs, and youth may explore and add additional disciplines for fairs, fun shows, clinics, and practices. Check the 4-H Web page for additional information. Groups who pilot or develop programs for new dog disciplines are encouraged to share the information so it can be added to the 4-H Web page.

- **Obedience: Brace Class – 2 dogs similar wither height – coupling device – connect dogs**

- **Obedience: Team of 2 class – any 2 dogs**

- **Obedience: Team of 4 class – any 4 dogs**

- **Dog Skillathon**
- **Dog Quiz Bowl**
- **Dog Care Presentation**
- **Drill Team**
- **Music/Freestyle Routine**
- **Fly Ball**
- **Tricks**
- **Costume**
- **Photography**
- **Frisbee**
- **Educational displays**
- **First Aid Kits**
- **Tracking**
- **Herding**
- **Dock Jumping**
- **Etc…..**

4-H Dog Show Rule Book for Nebraska – 4-H 420 - -
Acknowledgments

4-H 420 was developed under the guidance of many 4-H volunteers, parents, and staff members. Input and suggestions were given by many people at various 4-H events and through email requests for comments. Also input was given by people who agreed to review the draft document. Many thanks to everyone throughout the whole state who contributed in any way to make this new rule book possible. People who were on the revision team include:

Courtney Anderson – Adams Co.,
Tami Brandl - Hamilton Co.,
Jamee Bockerman – Hall Co., Hastings,
Joan Coker - Scottsbluff Co.,
Erin Embry - Douglas/Sarpy Co.,
Crystal Fangmier – Thayer and Nuckolls Co.,
Jill Harvey - Phelps Co.,
Jennie Penrose - Adams Co.,
Keith Penrose - Adams Co.,
Jennifer Smith - Lancaster Co.,

Theresa Wiiest - Custer Co.,

Sue Wise - Clay Co.,

Kathy Potthoff – State 4-H Office, State 4-H Dog Superintendent,

Ron Seymour – Adams Co., State 4-H Dog Superintendent,

Danielle Wallace – Lincoln, NE, UNL College Student

Lisa KarrLilienthal – UNL Extension Companion Animal Specialist,

Patricia Fairchild – UNL Extension 4-H Specialist,

Amanda Young – Lincoln, NE – UNL College Student,

Additional reviewers -

Delilah Choat – Boone Co.
Teri Choat - Boone Co.
Suzy Dearmont – Lancaster Co.
Darci Lindgren - Boone Co.
Paige Roach - Lancaster Co.
Joan Ruskamp Dodge Co.
Tabitha Wagner Johnson/Nemaha Co.
Pam Gaston Red Willow Co.
Sue DuBois – Saunders Co.
Kae Russell - Hamilton Co.
Mary Nelson Douglas/Sarpy Co.
Christy Burnette Hall Co.
Wendi Coker Callenius - Scottsbluff Co.,

Jane Dewey – Red Willow Co.
Sarah Eckstein – Saunders Co.
Pam Eckstein – Saunders Co.
Deb Austin – Sheridan Co
Peggy Phillips - Nemaha Co.
Mary Bristol - York, Seward, Polk Co.
Ann Teply - Central Four Counties
Amanda Young – Lincoln, NE – UNL College Student

Information included in this rulebook originated from 4-H 419 adopted in 2001 which was revised under the direction of the Nebraska 4-H Dog Advisory Committee. Credit is extended to the Kansas Cooperative Extension Service for permission to adapt the booklet “Guidelines for Kansas 4-H Dog Shows” for use in Nebraska. Sections of this handbook were adapted by permission from the American Kennel Club publications “Rules Applying to Registration and Dog Shows,” and “Obedience Regulations,” and from the Handbook of the Cornhusker Kennel Club of Lincoln, Nebraska, Inc.

Kaci Allstot, Howells
Dorothy Bokerman, Bellevue
Mary Bristol, Waco
Joan Coker, Scottsbluff
Gerald Hopp, Falls City
Cindy Nolte, Fairbury
Vicki Nolte, Fairbury
Diane Nitz, Friend
Martha Leimer, Pender
Janet Fox, UNL